VGN-FS71B/FS51B/FS31B/FS21B/FS21/FS91PS/FS91PSY/FS91S
VGN-FS680/FS660P/FS660/FS640/FS675P/FS635B/FS625B/FS645P/FS670FG/FS650F/FS630F/FS615F/
FS640Q/FS655FP/FS640FP/FS610FP/FS620P/FS620/FS630/FS690P/FS690B/FS690/FS690BH
VGN-FS295XP/FS215Z/FS215M/FS295VP/FS215B/FS215E/FS215SR/ FS215MR/FS285M/FS285B/FS285E/FS215S/FS285H
VGN-FS28C/FS25C/FS28GP/FS28SP/FS28LP/FS28TP/ FS25GP/ FS25SP/ FS25LP/ FS25TP

SERVICE MANUAL

Ver.4-2005K

Revision History

J	VGN-FS71B
	VGN-FS51B
	VGN-FS31B
	VGN-FS21B
	VGN-FS21
	VGN-FS91PS *
	VGN-FS91PSY *
	VGN-FS91S *
AM	VGN-FS680
	VGN-FS660P
	VGN-FS660
	VGN-FS640
	VGN-FS675P
	VGN-FS635B
	VGN-FS625B
	VGN-FS645P
	VGN-FS670FG
	VGN-FS650F
	VGN-FS630F
	VGN-FS615F
	VGN-FS640Q

AM	VGN-FS655FP	
	VGN-FS640FP	
	VGN-FS610FP	
	VGN-FS620P	
	VGN-FS620	
	VGN-FS630	⚠[MA]
	VGN-FS690P *	
	VGN-FS690B *	
	VGN-FS690 *	
	VGN-FS690BH *	⚠[MA]
EU	VGN-FS295XP	
	VGN-FS215Z	
	VGN-FS215M	
	VGN-FS295VP	⚠[COR]
	VGN-FS215B	
	VGN-FS215E	
	VGN-FS215SR	
	VGN-FS215MR	
	VGN-FS285M	
	VGN-FS285B	
	VGN-FS285E	

EU	VGN-FS215S
	VGN-FS285H
AO	VGN-FS28C
	VGN-FS25C
	VGN-FS28GP
	VGN-FS28SP
	VGN-FS28LP
	VGN-FS28TP
	VGN-FS25GP
	VGN-FS25SP
	VGN-FS25LP
	VGN-FS25TP

*: CTO Model

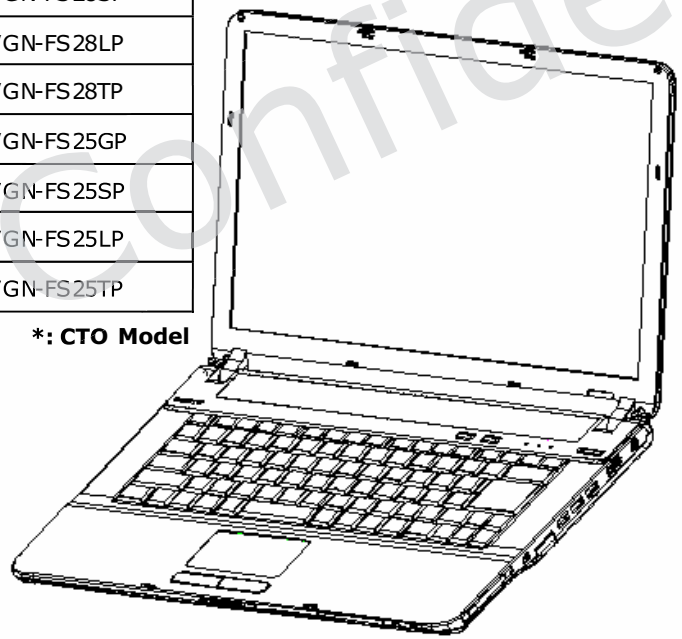

MEMORY STICK™

Wi Fi™ The Standard for Wireless Fidelity.

i™ S400

VAIO

- Design and specifications are subject to change without notice.

PERSONAL COMPUTER

SONY®

Sony Confidential

9-876-425-04

Information in this document is subject to change without notice.

Sony, VAIO and CLIE are trade m a r k s or registered of Sony. Microsoft, Windows, Windows Media, Outlook, Bookshelf and other Microsoft products are trademarks or registered trademarks of Microsoft Corporation in the United States and other countries. The word Bluetooth and the Bluetooth logo are trademarks of Bluetooth SIG, Inc. AMD,AMD logo, AMD Duron and combinations there of, 3Dnow!, are trademarks of Advanced micro Devices, Inc. Intel Inside logo, Pentium and Celeron are trademarks or registered trademarks if Intel Corporation. Transmeta, the Transmeta logo, Crusoe processor, the Crusoe logo and combination there of are trademarks of Transmeta Corporation in the USA and other countries. Graffiti, Hotsync, PalmModem, and palm OS are registered trademarks, and the Hotsync logo and Palm are trademarks of Plam,Inc.or its subsidiaries. (M)and Motrola are trademarks of Motrora, Inc. Other Motrola products and services with (R) mark like Dragomball are the trademarks of Motrola, Inc. All other names of systems, products and services in this manual are trademarks or registered trademarks of their respective owners.In this manual, the (TM)or(R)mark are not specified.

Caution Markings foe Lithium/Ion Battery-

The following or similar texts shall be provided on battery pack of equipment or in both the operating and the service instructions.

CAUTION: Danger of explosion if battery is incorrectly replaced. Replace only with the same or equivalent type recommended by the manufacturer. Discard used batteries according to the Manufacturer'

CAUTION: The battery pack used in this device may present a fire or chemical burn hazard if mistreated. Do not disassemble, heat above 100℃(212℉) or incinerate. Dispose of used battery promptly. Keep Away from children..

CAUTION: Changing the back up battery.

· Overcharging, short circuiting, reverse charging, multilati on or incineration of the cells must be avoided to prevent one or more of the following occurrences; release of toxic materials, release of hydrogen and/or oxygen gas, rise in surface temperature.

· If a cell has leaked or vented, it should be replaced immediately while avoiding to touch it without any protection..

Service and Inspection Precautions

***1.Obey precautionary markings and instructions**

* Labels and stamps on the cabinet, *chassis, and components are as *requiring special precautions. Be *sure to observe these precautions, *as well as all precautions listed in *the operating manual and other *associated documents..

***2.Use designated parts only**

*The set's components possess important safety *characteristics, such as noncombustibility and the *ability to tolerate large voltages. * Be sure that replacement parts possess the same *safety characteristics as the originals. Also *remember that the mark, *which appears in circuit *diagrams and parts lists, denotes components that *have particularly important safety functions be extra *sure to use only the designated components.

***3. Always follow the original design when *mounting parts and routing wires ***

*The original layout includes various *safety features, such as inclusion of *insulating materials (tubes and tape) and *the mounting of parts above the printer *board. In addition, internal wiring has *been routed and clamped so as to keep it away from hot or high-voltage parts. When mounting parts or routing wires, therefore, be sure to duplicat the original layout.

4. Inspect after completing service

After servicing, inspect to make Sure that all screws, components, And wiring have been returned to their original condition. Also check the area around the repair location to ensure that repair work has caused no damage, and confirm safety.

5.When replacing chip components.

Never reuse components. Also remember that the negative side of tantalum capacitors is easily Damaged by heat.,

6.When handing flexible print boards.

· The temperature of the soldering-Iron tip shoul be about 270℃.

· Do not apply the tip more than three times to the same pattern.

· Handle patterns with care; never apply force

Caution: Remember that hard disk drives are easily damaged by vibration. Always handle with care.

Sony Confidential

TABLE OF CONTENTS

Section	Title	Page
Chapter1. SPECIFICATIONS		
1-1.	Specifications	1-1
1-2.	CTO Information	1-3
Chapter2. BLOCK DIAGRAM		
2-1.	VGN-FS Series	2-1
2-2.	Port Replicator (VGP-PRFS10V)	2-2
Chapter3. FRAME HARNESS		
3-1.	VGN-FS Series	3-1
3-2.	Port Replicator (VGP-PRFS10V)	3-3
Chapter4. EXPLODED VIEW AND PARTS LIST		
Screws		
S-1.	Screws	4-2
Palmrest		
P-1.	Palmrest	4-3
Main Board		
M-1.	Main Board	4-5
Bottom		
B-1.	Bottom	4-7
CABINNET KBCOVER		
C-1.	CABINNET KBCOVER	4-9
LCD		
L-1.	LCD	4-10
ODD		
D-1.	ODD	4-13
HDD		
H-1.	HDD	4-14
ACCESSORIES		
A-1.	ACCESSORIES	4-15
A-2.	ACCESSORIES	4-18
SUBSTITUTION PARTS LIST		
T-1.	SUBSTITUTION PARTS LIST	4-20
DIP Switch		4-21
Chapter5.OTHER		
5-1.	Replacing the CPU	5-1
5-2.	Wiring the W-LAN CABLE	5-2

History of the changes is shown as the "Revision History" at the end of this data.

Sony Confidential

CHAPTER1. SPECIFICATIONS

1-1. Specifications

	J					
	VGN-FS71B	VGN-FS51B	VGN-FS31B	VGN-FS21B	VGN-FS21	VGN-FS91PS*/FS91PSY*/FS91S*
CPU	Pentium-M 750(Do1.86)	Pentium-M 740(Do1.73)	Celeron-M 370(Do1.5)	Celeron-M 360J(Do1.4)	Celeron-M 360J(Do1.4)	*1)
Graphic	NV44M	915GM	915GM	915GM	915GM	*2)
LCD	15.4"WXGA (Clear Black)	15.4"WXGA (Clear Black)	15.4"WXGA (Clear Black)	15.4"WXGA (High Brightness)	15.4"WXGA (High Brightness)	15.4"WXGA (Clear Black)
HDD	100GB	100GB	80GB	60GB	60GB	*3)
MEMORY(Slot1)	256MB DDR333	256MB DDR333	256MB DDR333	256MB DDR333	256MB DDR333	*4)
MEMORY(Slot2)	256MB DDR333	256MB DDR333	256MB DDR333	-	-	
QUANTITY[STANDARD/MAX]	512MB/2GB	512MB/2GB	512MB/2GB	256MB/2GB	256MB/2GB	
OPT-DRIVE	Super Multi Drive DL	Super Multi Drive DL	Super Multi Drive DL	Super Multi Drive DL	Super Multi Drive DL	Super Multi Drive DL/Combo /DVD-ROM
AC adaptor	AC19V11	AC19V11	AC19V11	AC19V11	AC19V11	AC19V10
Battery	BP2SA	BP2SA	BP2SA	BP2SA	BP2SA	BP2SA
Wireless LAN	O	O	O	O	O	O/X
Memory Card Adapter	O	O	O	O	O	O
USB FLOPPY DISK DRIVE	X	O	O	X	X	X
OS	XP Home	XP Home	XP Home	XP Home	XP Home	XP Home/XP Pro

*1)Celeron-M 360J,Celeron-M 370,Pentium-M 740,Pentium-M 770 *2)NV44M,915GM *3)100GB,80GB,60GB,40GB *4)512MB*2,256MB*2,256MB*1
*5)Celeron-M 360,Pentium-M 730,Pentium-M 740,Pentium-M 750,Pentium-M 760,Pentium-M 770 *6)NV44M,915GM *7)100GB,80GB,60GB,40GB,30GB
*8)512MB*1,512MB*2,256MB*1,256MB*2 *9)Combo,DVD+/-RW DL,DVD-ROM *10) 802.11b/g, 802.11a/b/g

	AM																			
	VGN-FS680	VGN-FS660P	VGN-FS660	VGN-FS640	VGN-FS675P	VGN-FS635B	VGN-FS625B	VGN-FS645P	VGN-FS670FG	VGN-FS650F	VGN-FS630F	VGN-FS615F	VGN-FS640Q	VGN-FS655FP	VGN-FS640FP	VGN-FS610FP	VGN-FS620P	VGN-FS620	VGN-FS630	VGN-FS630P*/FS630S*/FS680*/FS680P*
CPU	Pentium-M 750(Do1.86)	Pentium-M 740(Do1.73)	Pentium-M 740(Do1.73)	Pentium-M 730(Do1.6)	Pentium-M 750(Do1.86)	Pentium-M 730(Do1.6)	Pentium-M 730(Do1.6)	Pentium-M 730(Do1.6)	Pentium-M 750(Do1.86)	Pentium-M 740(Do1.73)	Celeron-M 360J(Do1.4)	Celeron-M 360J(Do1.4)	Pentium-M 730(Do1.6)	Pentium-M 740(Do1.73)	Pentium-M 730(Do1.6)	Celeron-M 360J(Do1.4)	Pentium-M 730(Do1.6)	Pentium-M 730(Do1.6)	Pentium-M 740(Do1.73)	*5)
Graphic	NV44M	NV44M	NV44M	915GM	NV44M	915GM	915GM	NV44M	915GM	915GM	915GM	915GM	915GM	915GM	915GM	915GM	915GM	915GM	915GM	*6)
LCD	15.4"WXGA (Clear Black)	15.4"WXGA (Clear Black)	15.4"WXGA (Clear Black)	15.4"WXGA (High Brightness)	15.4"WXGA (Clear Black)	15.4"WXGA (High Brightness)	15.4"WXGA (High Brightness)	15.4"WXGA (Clear Black)	15.4"WXGA (Clear Black)	15.4"WXGA (High Brightness)	15.4"WXGA (High Brightness)	15.4"WXGA (High Brightness)	15.4"WXGA (High Brightness)	15.4"WXGA (High Brightness)	15.4"WXGA (High Brightness)	15.4"WXGA (High Brightness)	15.4"WXGA (High Brightness)	15.4"WXGA (High Brightness)	15.4"WXGA (High Brightness)	15.4"WXGA (High Brightness)
HDD	100GB	80GB	80GB	80GB	100GB	60GB	40GB	80GB	80GB	60GB	40GB	40GB	80GB	80GB	60GB	40GB	80GB	80GB	80GB	*7)
MEMORY(Slot1)	512MB DDR333	512MB DDR333	512MB DDR333	256MB DDR333	512MB DDR333	512MB DDR333	256MB DDR333	256MB DDR333	256MB DDR333	256MB DDR333	256MB DDR333	256MB DDR333	256MB DDR333	512MB DDR333	256MB DDR333	256MB DDR333	256MB DDR333	256MB DDR333	256MB DDR333	*8)
MEMORY(Slot2)	512MB DDR333	512MB DDR333	512MB DDR333	256MB DDR333	512MB DDR333	-	-	256MB DDR333	256MB DDR333	256MB DDR333	256MB DDR333	256MB DDR333	256MB DDR333	512MB DDR333	256MB DDR333	-	256MB DDR333	256MB DDR333	256MB DDR333	
QUANTITY[STANDARD/MAX]	1GBB/2GB	1MB/2GB	1MB/2GB	512MB/2GB	1MB/2GB	512MB/2GB	256MB/2GB	512MB/2GB	512MB/2GB	512MB/2GB	512MB/2GB	512MB/2GB	512MB/2GB	1MB/2GB	512MB/2GB	256MB/2GB	512MB/2GB	512MB/2GB	512MB/2GB	
OPT-DRIVE	DVD+/-RW DL	DVD+/-RW DL	DVD+/-RW DL	DVD+/-RW DL	DVD+/-RW DL	Combo	Combo	DVD+/-RW DL	DVD+/-RW DL	DVD+/-RW DL	DVD+/-RW DL	Combo	DVD+/-RW DL	DVD+/-RW DL	Combo	Combo	Combo	Combo	Combo	*9)
AC adaptor	AC19V9	AC19V11	AC19V11	AC19V11	AC19V11	AC19V11	AC19V11	AC19V11	AC19V9	AC19V10	AC19V10	AC19V10	AC19V11	AC19V10	AC19V10	AC19V10	AC19V11	AC19V11	AC19V11	AC19V1O (w/o PR)/AC19V9 (W/ PR)
Battery	BP2SA	BP2SA	BP2SA	BP2SA	BP2SA	BP2SA	BP2SA	BP2SA	BP2SA	BP2SA	BP2SA	BP2SA	BP2SA	BP2SA	BP2SA	BP2SA	BP2SA	BP2SA	BP2SA	BP2SA
Wireless LAN	O	O	O	O	O	O	O	O	O	O	O	O	O	O	O	O	O	O	O	*10)
Memory Card Adapter	X	X	X	X	X	X	X	X	X	X	X	X	X	X	X	X	X	X	X	X
USB FLOPPY DISK DRIVE	X	X	X	X	X	X	X	X	X	X	X	X	X	X	X	X	X	X	X	X
OS	XP Home	XP Pro	XP Home	XP Home	XP Pro	XP Pro	XP Pro	XP Pro	XP Home	XP Home	XP Home	XP Home	XP Home	XP Pro	XP Pro	XP Pro	XP Home	XP Home	XP Home	XP Pro/XP Home
																			2 [MA]	2 [MA]

- The model that is accompanied by asterisk(*) is the CTO model.
  For the equipment configuration, refer to the CTO Information.
- The trademarks or registered trademarks of above ,refer to page2.

Sony Confidential

	EU												
	VGN-FS295XP	VGN-FS215Z	VGN-FS215M	VGN-FS295VP	VGN-FS215B	VGN-FS215E	VGN-FS215SR	VGN-FS215MR	VGN-FS285M	VGN-FS285B	VGN-FS285E	VGN-FS215S	VGN-FS285H
CPU	Pentium-M 750(Do1.86)	Pentium-M 740(Do1.73)	Pentium-M 740(Do1.73)	Pentium-M 740(Do1.73)	Pentium-M 740(Do1.73)	Celeron-M 370(Do1.5)	Pentium-M 750(Do1.86)	Pentium-M 740(Do1.73)	Pentium-M 740(Do1.73)	Pentium-M 740(Do1.73)	Celeron-M 370(Do1.5)	Pentium-M 750(Do1.86)	Pentium-M 740(Do1.73)
Graphic	NV44M	NV44M	NV44M	NV44M	915GM	915GM	NV44M	NV44M	NV44M	915GM	915GM	NV44M	NV44M
LCD	15.4"WXGA (High Brightness)	15.4"WXGA (Clear Black)	15.4"WXGA (Clear Black)	15.4"WXGA (High Brightness)	15.4"WXGA (Clear Black)	15.4"WXGA (High Brightness)	15.4"WXGA (Clear Black)	15.4"WXGA (Clear Black)	15.4"WXGA (Clear Black)	15.4"WXGA (High Brightness)	15.4"WXGA (High Brightness)	15.4"WXGA (Clear Black)	15.4"WXGA (Clear Black)
HDD	100GB	100GB	80GB	80GB	60GB	60GB	100GB	80GB	80GB	80GB	80GB	100GB	80GB
MEMORY(Slot1)	512MB DDR333	256MB DDR333	256MB DDR333	512MB DDR333	256MB DDR333	256MB DDR333	256MB DDR333	256MB DDR333	512MB DDR333	256MB DDR333	256MB DDR333	256MB DDR333	256MB DDR333
MEMORY(Slot2)	-	256MB DDR333	256MB DDR333	-	256MB DDR333	256MB DDR333	256MB DDR333	256MB DDR333	512MB DDR333	256MB DDR333	256MB DDR333	256MB DDR333	256MB DDR333
QUANTITY[STANDARD/MAX]	512MB/2GB	512MB/2GB	512MB/2GB	512MB/2GB	512MB/2GB	512MB/2GB	512MB/2GB	512MB/2GB	1GB/2GB	512MB/2GB	512MB/2GB	512MB/2GB	512MB/2GB
OPT-DRIVE	DVD+/-RW DL	DVD+/-RW DL	DVD+/-RW DL	DVD+/-RW DL	DVD+/-RW DL	DVD+/-RW DL	DVD+/-RW DL	DVD+/-RW DL	DVD+/-RW DL	DVD+/-RW DL	DVD+/-RW DL	DVD+/-RW DL	DVD+/-RW DL
AC adaptor	AC19V11	AC19V9	AC19V11	AC19V11	AC19V11	AC19V11	AC19V12	AC19V12	AC19V11	AC19V11	AC19V11	AC19V11	AC19V11
Battery	BP2SA	BP2SA	BP2SA	BP2SA	BP2SA	BP2SA	BP2SA	BP2SA	BP2SA	BP2SA	BP2SA	BP2SA	BP2SA
Wireless LAN	O	O	O	O	O	O	O	O	O	O	O	O	O
Memory Card Adapter	X	X	X	X	X	X	X	X	X	X	X	X	X
USB FLOPPY DISK DRIVE	X	X	X	X	X	X	X	X	X	X	X	X	X
OS	XP Pro	XP Home	XP Home	XP Pro	XP Home	XP Home	XP Home	XP Home	XP Home	XP Home	XP Home	XP Home	XP Home

	AO									
	VGN-FS28C	VGN-FS25C	VGN-FS28GP	VGN-FS28SP	VGN-FS28LP	VGN-FS28TP	VGN-FS25GP	VGN-FS25SP	VGN-FS25LP	VGN-FS25TP
CPU	Pentium-M 740(Do1.73)	Celeron-M 360J(Do1.4)	Pentium-M 760(Do2.0)	<-	<-	<-	Pentium-M 740(Do1.73)	<-	<-	<-
Graphic	NV44M	915GM	NV44M	<-	<-	<-	NV44M	<-	<-	<-
LCD	15.4"WXGA (High Brightness)	15.4"WXGA (High Brightness)	15.4"WXGA (Clear Black)	<-	<-	<-	15.4"WXGA (High Brightness)	<-	<-	<-
HDD	40GB	40GB	80GB	<-	<-	<-	60GB	<-	<-	<-
MEMORY(Slot1)	512MB DDR333	256MB DDR333	512MB DDR333	<-	<-	<-	512MB DDR333	<-	<-	<-
MEMORY(Slot2)	-	-	-	<-	<-	<-	-	<-	<-	<-
QUANTITY[STANDARD/MAX]	512MB/2GB	256MB/2GB	512MB/2GB	<-	<-	<-	512MB/2GB	<-	<-	<-
OPT-DRIVE	Combo	Combo	DVD+/-RW DL	<-	<-	<-	DVD+/-RW DL	<-	<-	<-
AC adaptor	AC19V10	AC19V10	AC19V10	<-	<-	<-	AC19V10	<-	<-	<-
Battery	BP2SA	BP2SA	BP2SA	<-	<-	<-	BP2SA	<-	<-	<-
Wireless LAN	O	O	O	<-	<-	<-	O	<-	<-	<-
Memory Card Adapter	X	X	X	<-	<-	<-	X	<-	<-	<-
USB FLOPPY DISK DRIVE	X	X	X	<-	<-	<-	X	<-	<-	<-
OS	XP Home	XP Home	XP Pro	<-	<-	<-	XP Pro	<-	<-	<-

- The model that is accompanied by asterisk(*) is the CTO model.
  For the equipment configuration, refer to the CTO Information.
- The trademarks or registered trademarks of above ,refer to page2.

Sony Confidential

1-2.CTO Information

Model name:VGN-FS91PS
Model number:PCG-7A1N (w/ W-LAN), PCG-7A2N(w/o W-LAN)
OS:WinXP Pro

CPU	Pemtium-M 770 6-707-261-01 CPU PM 2.13	Pemtium-M 740 6-707-258-01 CPU PM 1.73	Pemtium-M 730 6-707-268-01 CPU CEL-M 1.5	Celeron-M 360J 6-707-715-01 CPU CEL-M 1.4	
HDD	100GB A-1127-961-A ASSY HDD 100GB(TO)	80GB A-1108-905-A ASSY HDD 80GB(TO)	60GB A-1108-908-A ASSY HDD 60GB(TO)	40GB A-1108-910-A ASSY HDD 40GB(HI)	
LCD	15.4/WSXGA+/ClearBlack A-1133-650-A ASSY LCD (HC-SXGA+-WLAN)(S)(WHITE)	15.4/WXGA/ClearBlack A-1133-651-A ASSY LCD (HC-XGA-WLAN)(S)(WHITE)	15.4/WSXGA+/ClearBlack A-1127-878-A ASSY LCD (HC-SXGA+-WLAN)(S)(GRAY)	15.4/WXGA/ClearBlack A-1127-879-A ASSY LCD (HC-WXGA-WLAN)(S)(GRAY)	
Graphics	NV44M	915GM			
Memory	256MB*1 6-707-029-01 IC HYS64D32020HDL-6-C	256MB*2 6-707-029-01 IC HYS64D32020HDL-6-C	512MB*2 6-705-096-01 IC HYS64D64020HBDL-6-C		
Opt.Drive	Super Multi +/-DL A-1127-946-A ASSY ODD PANA(SM+DL)(W)	Super Multi +/-DL A-1127-947-A ASSY ODD PANA(SM+DL)(B)	Combo A-1127-956-A ASSY ODD QSI(SBW 243)(W)	Combo A-1127-957-A ASSY ODD QSI(SBW 243)(B)	DVD-ROM A-1127-958-A ASSY ODD Toshiba(C2732)(W)	DVD-ROM A-1127-959-A ASSY ODD Toshiba(C2732)(B)
W-LAN	802.11b/g(Intel) 1-761-864-61 WIRELESS LAN CARD	None			
Office	2003 Professional	2003 Personal	None		
Other Option	Memory card adapter 1-478-615-11 MEMORY CARD ADAPTER				
CHASSIS COLOR	White	Gray			

Model name:VGN-FS91PSY
Model number:PCG-7A1N (w/ W-LAN), PCG-7A2N(w/o W-LAN)
OS:WinXP Pro

CPU	Pemtium-M 770 6-707-261-01 CPU PM 2.13	Pemtium-M 740 6-707-258-01 CPU PM 1.73	Pemtium-M 730 6-707-268-01 CPU CEL-M 1.5	Celeron-M 360J 6-707-715-01 CPU CEL-M 1.4
HDD	100GB A-1127-961-A ASSY HDD 100GB(TO)	80GB A-1108-905-A ASSY HDD 80GB(TO)	60GB A-1108-908-A ASSY HDD 60GB(TO)	40GB A-1108-910-A ASSY HDD 40GB(HI)
LCD	15.4/WSXGA+/ClearBlack A-1127-878-A ASSY LCD (HC-SXGA+-WLAN)(S)(GRAY)	15.4/WXGA/ClearBlack A-1127-879-A ASSY LCD (HC-WXGA-WLAN)(S)(GRAY)		
Graphics	915GM			
Memory	256MB*1 6-707-029-01 IC HYS64D32020HDL-6-C	256MB*2 6-707-029-01 IC HYS64D32020HDL-6-C	512MB*2 6-705-096-01 IC HYS64D64020HBDL-6-C	
Opt.Drive	Super Multi +/-DL A-1127-947-A ASSY ODD PANA(SM+DL)(B)	Combo A-1127-957-A ASSY ODD QSI(SBW 243)(B)	DVD-ROM A-1127-959-A ASSY ODD Toshiba(C2732)(B)	
W-LAN	802.11b/g(Intel) 1-761-864-61 WIRELESS LAN CARD	None		
Office	2003 Professional	2003 Personal	None	
Other Option	Memory card adapter 1-478-615-11 MEMORY CARD ADAPTER			
CHASSIS COLOR	Gray			

Model name:VGN-FS91S
Model number:PCG-7A1N (w/ W-LAN), PCG-7A2N(w/o W-LAN)
OS:WinXP Home

CPU	Pemtium-M 770 6-707-261-01 CPU PM 2.13	Pemtium-M 740 6-707-258-01 CPU PM 1.73	Pemtium-M 730 6-707-268-01 CPU CEL-M 1.5	Celeron-M 360J 6-707-715-01 CPU CEL-M 1.4	
HDD	100GB A-1127-961-A ASSY HDD 100GB(TO)	80GB A-1108-905-A ASSY HDD 80GB(TO)	60GB A-1108-908-A ASSY HDD 60GB(TO)	40GB A-1108-910-A ASSY HDD 40GB(HI)	
LCD	15.4/WSXGA+/ClearBlack A-1133-650-A ASSY LCD (HC-SXGA+-WLAN)(S)(WHITE)	15.4/WXGA/ClearBlack A-1133-651-A ASSY LCD (HC-XGA-WLAN)(S)(WHITE)	15.4/WSXGA+/ClearBlack A-1127-878-A ASSY LCD (HC-SXGA+-WLAN)(S)(GRAY)	15.4/WXGA/ClearBlack A-1127-879-A ASSY LCD (HC-WXGA-WLAN)(S)(GRAY)	
Graphics	NV44M	915GM			
Memory	256MB*1 6-707-029-01 IC HYS64D32020HDL-6-C	256MB*2 6-707-029-01 IC HYS64D32020HDL-6-C	512MB*2 6-705-096-01 IC HYS64D64020HBDL-6-C		
Opt.Drive	Super Multi +/-DL A-1127-946-A ASSY ODD PANA(SM+DL)(W)	Super Multi +/-DL A-1127-947-A ASSY ODD PANA(SM+DL)(B)	Combo A-1127-956-A ASSY ODD QSI(SBW 243)(W)	Combo A-1127-957-A ASSY ODD QSI(SBW 243)(B)	DVD-ROM A-1127-958-A ASSY ODD Toshiba(C2732)(W)	DVD-ROM A-1127-959-A ASSY ODD Toshiba(C2732)(B)
W-LAN	802.11b/g(Intel) 1-761-864-61 WIRELESS LAN CARD	None			
Office	2003 Professional	2003 Personal	None		
Other Option	Memory card adapter 1-478-615-11 MEMORY CARD ADAPTER				
CHASSIS COLOR	White	Gray			

Sony Confidential

Model name:VGN-FS690P
Model number:PCG-7A1L(802.11a/b/g),PCG-7A2L(802.11b/g)
OS:WinXP Pro

CPU	Pentium-M 770 6-707-261-01 CPU PM 2.13	Pentium-M 760 6-707-260-01 CPU PM2.0	Pentium-M 750 6-707-259-01 CPU PM 1.86	Pentium-M 740 6-707-258-01 CPU PM 1.73	Pentium-M 730 6-707-252-01 CPU PM 1.6	Celeron-M 360J 6-707-715-01 CPU CEL-M 1.4
HDD	100GB A-1127-961-A ASSY HDD 100GB(TO)	80GB A-1108-905-A ASSY HDD 80GB(TO)	60GB A-1108-908-A ASSY HDD 60GB(TO)	40GB A-1108-910-A ASSY HDD 40GB(HI)	30GB A-1108-911-A ASSY HDD 30GB(HI)	
LCD	15.4/WXGA/High Brightness A-1133-649-A ASSY LCD (BR-WLAN)(Q)(S)(WHITE)					
Graphics	NV44M	915GM				
Memory	256MB*1 6-707-029-01 IC HYS64D32020HDL-6-C	256MB*2 6-707-029-01 IC HYS64D32020HDL-6-C	512MB*1 6-705-096-01 IC HYS64D64020HBDL-6-C	512MB*2 6-705-096-01 IC HYS64D64020HBDL-6-C		
Opt.Drive	DVD+-RW A-1127-951-A ASSY ODD SONY(DVD+DL)(W)	Combo A-1127-956-A ASSY ODD QSI(SBW 243)(W)	DVD-ROM A-1127-958-A ASSY ODD Toshiba(C2732)(W)			
W-LAN	802.11b/g(Intel) 1-761-864-51 WIRELESS LAN CARD	802.11a/b/g 1-789-095-51 WIRELESS LAN CARD				
CHASSIS COLOR	White					

Model name:VGN-FS690
Model number:PCG-7A1L(802.11a/b/g),PCG-7A2L(802.11b/g)
OS:WinXP Home

CPU	Pentium-M 770 6-707-261-01 CPU PM 2.13	Pentium-M 760 6-707-260-01 CPU PM2.0	Pentium-M 750 6-707-259-01 CPU PM 1.86	Pentium-M 740 6-707-258-01 CPU PM 1.73	Pentium-M 730 6-707-252-01 CPU PM 1.6	Celeron-M 360J 6-707-715-01 CPU CEL-M 1.4
HDD	100GB A-1127-961-A ASSY HDD 100GB(TO)	80GB A-1108-905-A ASSY HDD 80GB(TO)	60GB A-1108-908-A ASSY HDD 60GB(TO)	40GB A-1108-910-A ASSY HDD 40GB(HI)	30GB A-1108-911-A ASSY HDD 30GB(HI)	
LCD	15.4/WXGA/High Brightness A-1133-649-A ASSY LCD (BR-WLAN)(Q)(S)(WHITE)					
Graphics	NV44M	915GM				
Memory	256MB*1 6-707-029-01 IC HYS64D32020HDL-6-C	256MB*2 6-707-029-01 IC HYS64D32020HDL-6-C	512MB*1 6-705-096-01 IC HYS64D64020HBDL-6-C	512MB*2 6-705-096-01 IC HYS64D64020HBDL-6-C		
Opt.Drive	DVD+-RW A-1127-951-A ASSY ODD SONY(DVD+DL)(W)	Combo A-1127-956-A ASSY ODD QSI(SBW 243)(W)	DVD-ROM A-1127-958-A ASSY ODD Toshiba(C2732)(W)			
W-LAN	802.11b/g(Intel) 1-761-864-51 WIRELESS LAN CARD	802.11a/b/g 1-789-095-51 WIRELESS LAN CARD				
CHASSIS COLOR	White					

Model name:VGN-FS690B
Model number:PCG-7A1L(802.11a/b/g),PCG-7A2L(802.11b/g)
OS:WinXP Pro

CPU	Pentium-M 770 6-707-261-01 CPU PM 2.13	Pentium-M 760 6-707-260-01 CPU PM2.0	Pentium-M 750 6-707-259-01 CPU PM 1.86	Pentium-M 740 6-707-258-01 CPU PM 1.73	Pentium-M 730 6-707-252-01 CPU PM 1.6	Celeron-M 360J 6-707-715-01 CPU CEL-M 1.4
HDD	100GB A-1127-961-A ASSY HDD 100GB(TO)	80GB A-1108-905-A ASSY HDD 80GB(TO)	60GB A-1108-908-A ASSY HDD 60GB(TO)	40GB A-1108-910-A ASSY HDD 40GB(HI)	30GB A-1108-911-A ASSY HDD 30GB(HI)	
LCD	15.4/WXGA/High Brightness A-1133-649-A ASSY LCD (BR-WLAN)(Q)(S)(WHITE)					
Graphics	NV44M	915GM				
Memory	256MB*1 6-707-029-01 IC HYS64D32020HDL-6-C	256MB*2 6-707-029-01 IC HYS64D32020HDL-6-C	512MB*1 6-705-096-01 IC HYS64D64020HBDL-6-C	512MB*2 6-705-096-01 IC HYS64D64020HBDL-6-C		
Opt.Drive	DVD+-RW A-1127-951-A ASSY ODD SONY(DVD+DL)(W)	Combo A-1127-956-A ASSY ODD QSI(SBW 243)(W)	DVD-ROM A-1127-958-A ASSY ODD Toshiba(C2732)(W)			
W-LAN	802.11b/g(Intel) 1-761-864-51 WIRELESS LAN CARD	802.11a/b/g 1-789-095-51 WIRELESS LAN CARD				
CHASSIS COLOR	White					

⚠[MA]

Model name:VGN-FS690BH
Model number:PCG-7A1L(802.11a/b/g),PCG-7A2L(802.11b/g)
OS:WinXP Home

CPU	Pentium-M 770 6-707-261-01 CPU PM 2.13	Pentium-M 760 6-707-260-01 CPU PM2.0	Pentium-M 750 6-707-259-01 CPU PM 1.86	Pentium-M 740 6-707-258-01 CPU PM 1.73	Pentium-M 730 6-707-252-01 CPU PM 1.6	Celeron-M 360J 6-707-715-01 CPU CEL-M 1.4
HDD	100GB A-1127-961-A ASSY HDD 100GB(TO)	80GB A-1108-905-A ASSY HDD 80GB(TO)	60GB A-1108-908-A ASSY HDD 60GB(TO)	40GB A-1108-910-A ASSY HDD 40GB(HI)	30GB A-1108-911-A ASSY HDD 30GB(HI)	
LCD	15.4/WXGA/High Brightness A-1133-649-A ASSY LCD (BR-WLAN)(Q)(S)(WHITE)					
Graphics	NV44M	915GM				
Memory	256MB*1 6-707-029-01 IC HYS64D32020HDL-6-C	256MB*2 6-707-029-01 IC HYS64D32020HDL-6-C	512MB*1 6-705-096-01 IC HYS64D64020HBDL-6-C	512MB*2 6-705-096-01 IC HYS64D64020HBDL-6-C		
Opt.Drive	DVD+-RW A-1127-951-A ASSY ODD SONY(DVD+DL)(W)	Combo A-1127-956-A ASSY ODD QSI(SBW 243)(W)	DVD-ROM A-1127-958-A ASSY ODD Toshiba(C2732)(W)			
W-LAN	802.11b/g(Intel) 1-761-864-51 WIRELESS LAN CARD	802.11a/b/g 1-789-095-51 WIRELESS LAN CARD				
CHASSIS COLOR	White					

Sony Confidential

CHAPTER2.
BLOCK DIAGRAM

2-1.VGN-FS series

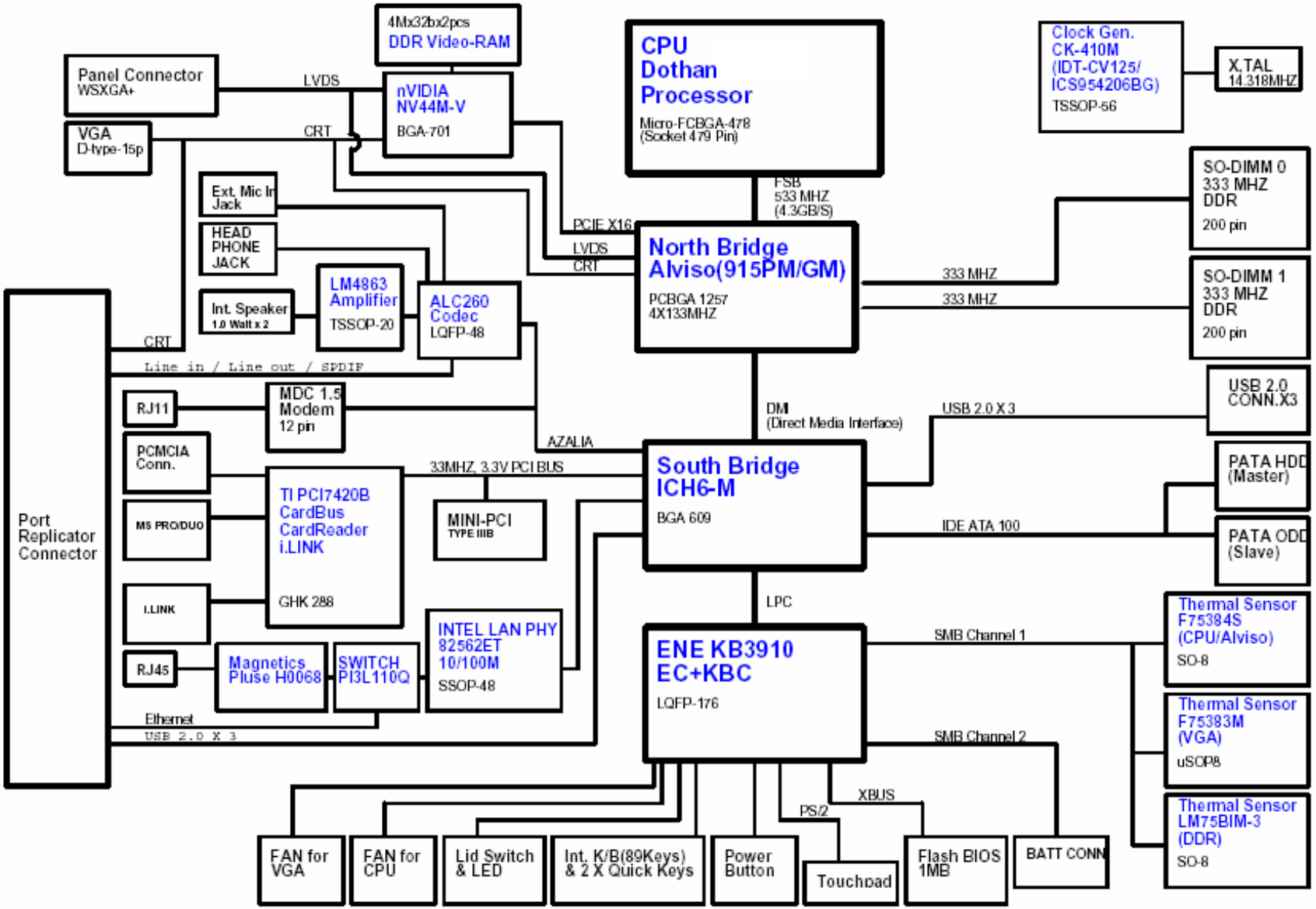

Sony Confidential

2-2. Port Replicator (VGP-PRFS10V)

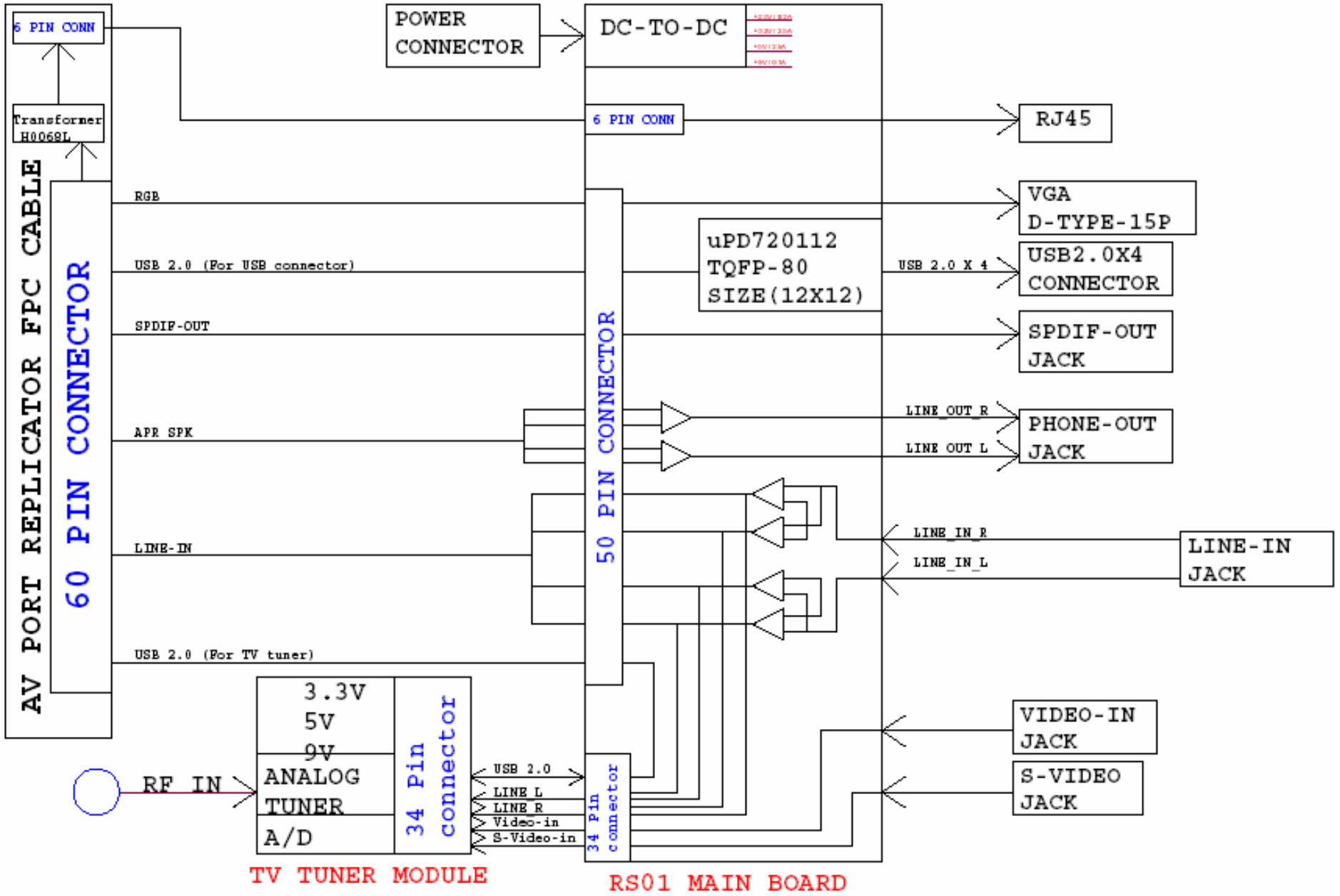

Sony Confidential

CHAPTER3.
FRAME HARNESS DIAGRAM

3-1 VGN-FS Series (TOP)

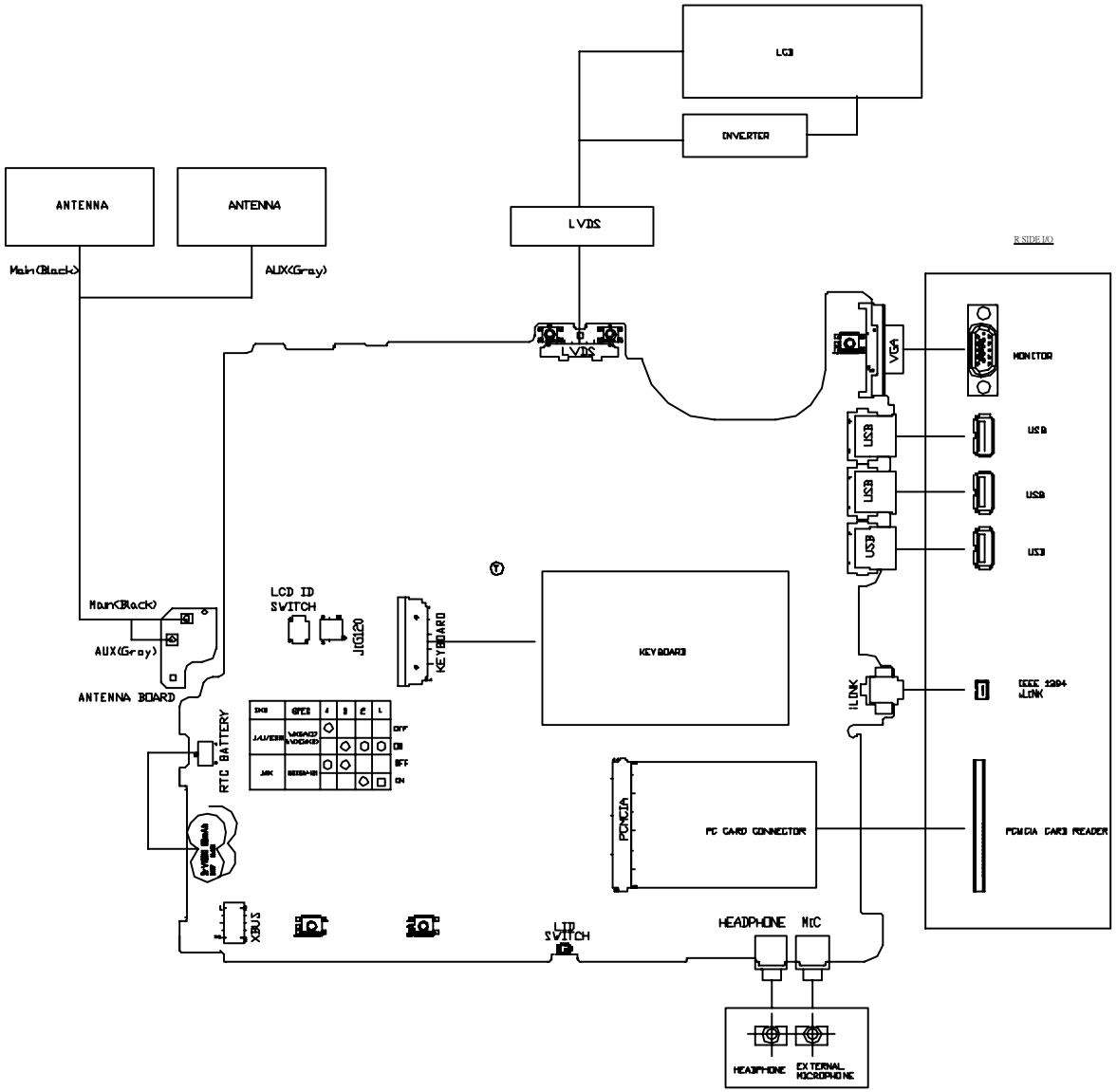

Sony Confidential

3-1 VGN-FS Series (BOTTOM)

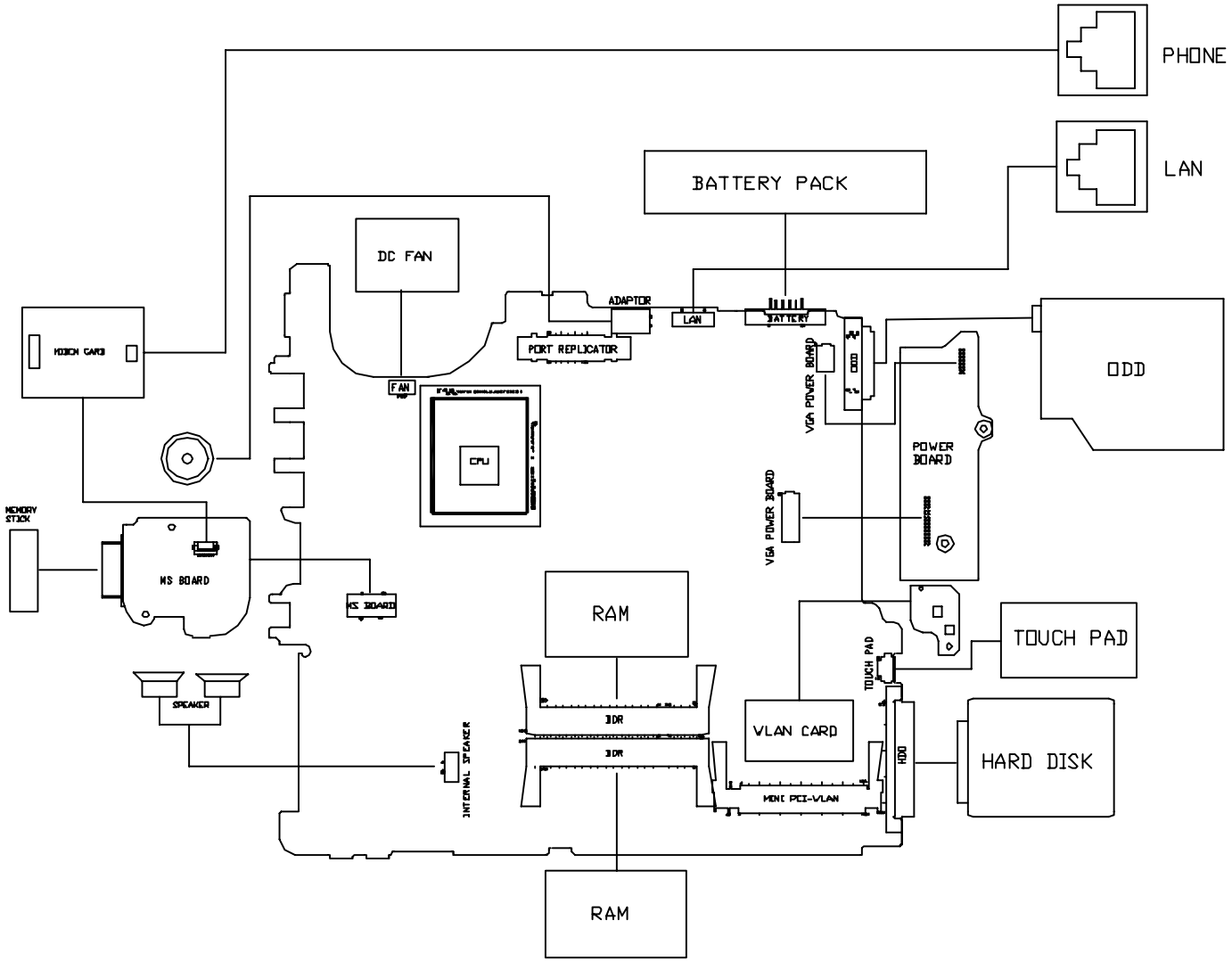

Sony Confidential

3-2 Port Replicator (VGP-PRFS10V)

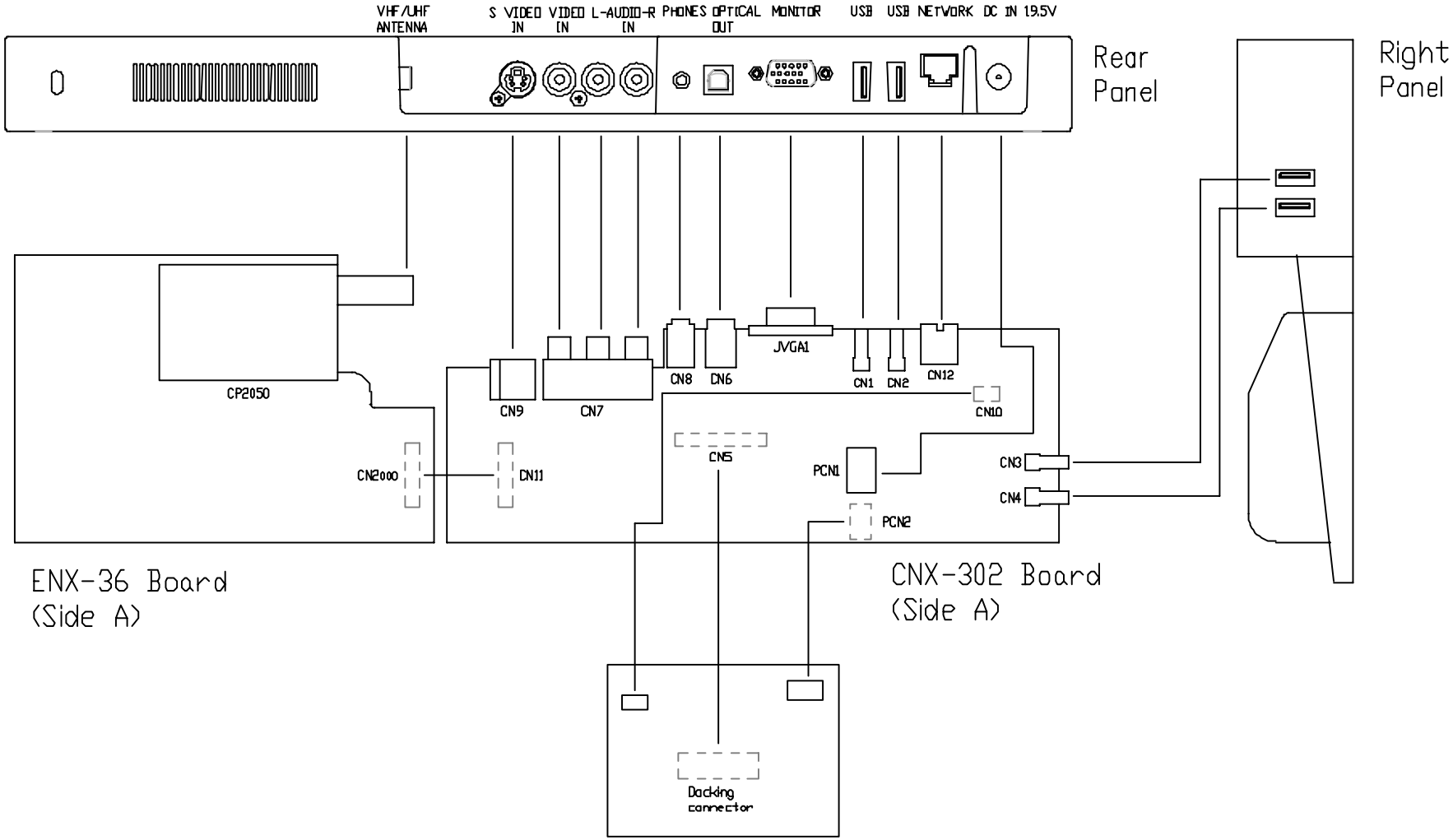

Sony Confidential

CHAPTER 4
EXPLODED VIEWS AND PARTS LIST

· The parts id compiled by blocks of a Palmrest and bottom etc.
The sections of the parts list are different depending on the model.
Please refer to list of contents shown in the below.

Section Page

Screws
S-1.Screws..... 4-2

Palmrest
P-1.Palmrest..... 4-3

Main Board
M-1.Main Board..... 4-5

BOTTOM
B-1.BOTTOM..... 4-7

CABINET KBCOVER
C-1.CABINET KBCOVER..... 4-9

LCD
L-1.LCD..... 4-10

ODD
D-1.ODD 4-13

HDD
H-1.HDD..... 4-14

ACCESSORIES
A-1.ACCESSORIES..... 4-15
A-2.ACCESSORIES..... 4-18

SUBSTITUTION PARTS LIST
T-1.SUBSTITUTION PARTS LIST..... 4-20

DIP Switch..... 4-21

NOTE:

· The mechanical parts with no reference number in the exploded views are not supplied.
· When two or more parts are shown, use the part described first as the main part.
· The parts marked "&" are the "Customer Replacable Parts(CRP)" that can be replaced by Filed Customer Support. Especially the parts with the <&> mark require the special attention to use them. Here fore, check first whether the desired part is one of the targetted parts of the Customer Replacable Parts(CRP), or the non-targetted parts by referring to the exploded view.

The components identified by mark ⚠
or dotted line with mark ⚠ are critical for safely.
Replace only with part number specified.

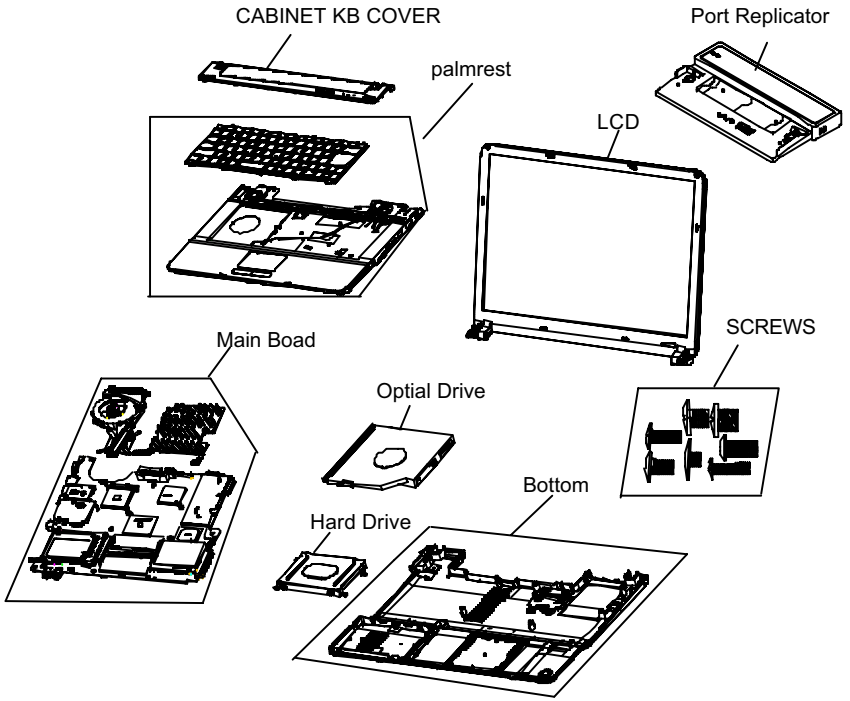

Screws are supplied with a whole set.

Sony Confidential

S-1. SCREWS

B0

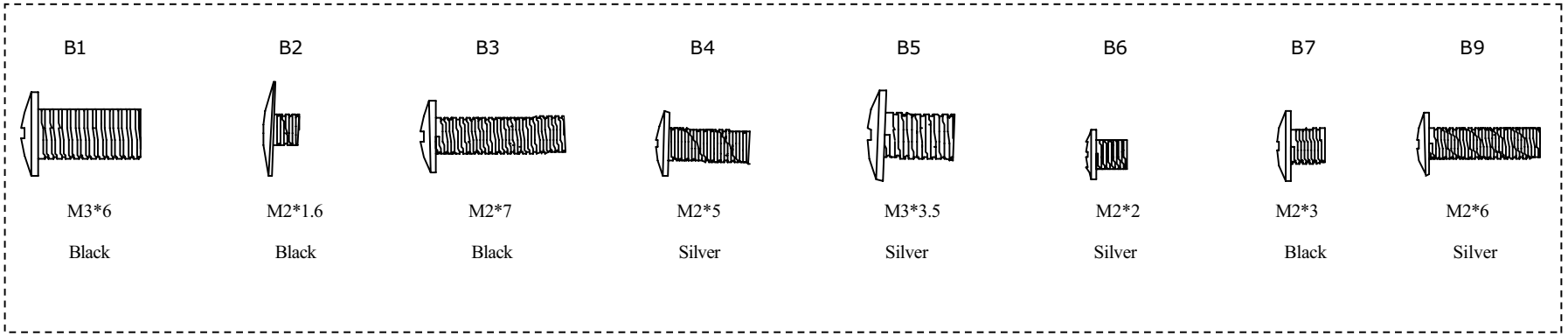

Ref.No.	Part No		Description
B0	A-1133-648-A	&	SCREW ASSY
B1			SCREW M3
B2			APPEARANCE SCREW M2
B3			SCREW (M2), EXTERIOR VIEW
B4			GRIP, M2
B5			SCREW, SPECIAL HEAD
B6			SCREW, SPECIAL HEAD
B7			SCREW, M2 SPECIAL HEAD, EG GRIP
B9			SCREW, M2 SPECIAL HEAD, EG GRIP

Note: Screws are supplied with B0, a whole set.

Sony Confidential

P-1. Palmrest

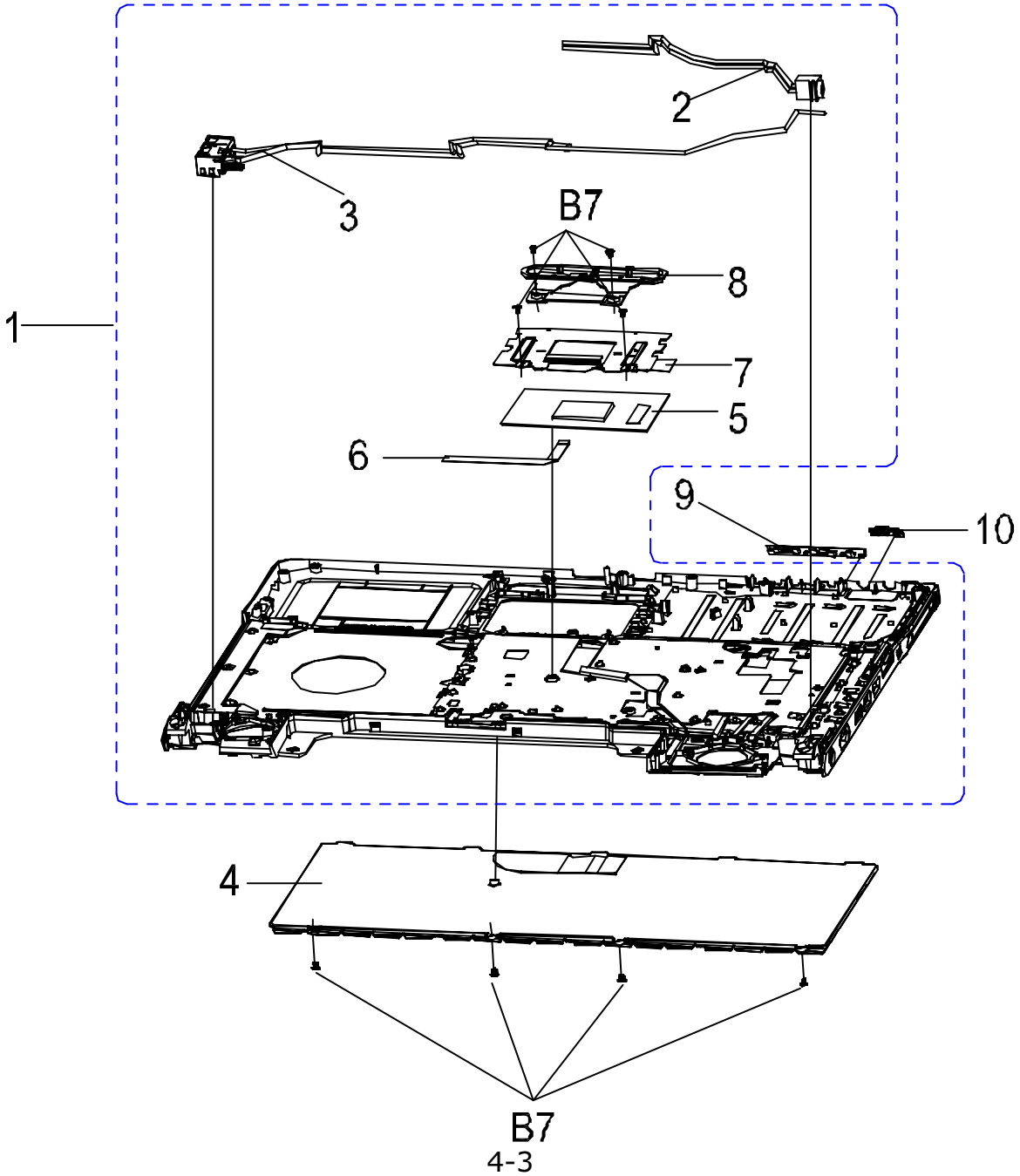

4-3

Sony Confidential

P-1. Palmrest

Ref.No.	Part No.	Description
2	1-963-519-11	MS01 CABLE DC IN
6	1-830-442-11	MS01 TOUCHPAD FFC
7	X-2048-471-1	MS01 SUBASSY TOUCHPAD BRACKET
8	2-582-765-01	MS01 TOUCHPAD BUTTON
B7		SCREW, M2 SPECIAL HEAD, EG GRIP

* :CTO Model

			J								AM																											EU															AO										
Ref.No.	Part No.	Description	FS71B	FS51B	FS31B	FS21B	FS21	FS91PS*	FS91PSY*	FS91S*	FS680	FS660P	FS660	FS640	FS675P	FS635B	FS625B	FS645P	FS670FG	FS650F	FS630F	FS615F	FS640Q	FS655FP	FS640FP	FS610FP	FS620P	FS620	FS630	FS690P*	FS690B*	FS690*	FS690BH*	FS295XP	FS215Z	FS215M	FS295VP	FS215B	FS215E	FS215SR	FS215MR	FS285M	FS285B	FS285E	FS215S	FS285H	FS28C	FS25C	FS28GP	FS28SP	FS28LP	FS28TP	FS25GP	FS25SP	FS25LP	FS25TP
1	A-1128-300-A	MS02 ASSY CABINET PALMREST	•	•	•	•	•	•		•	•	•	•	•		•	•		•	•	•	•	•				•	•	•	•	•	•			•	•		•	•	•	•	•	•	•	•	•	•	•	•	•	•	•	•	•	•	•	•
	A-1117-464-A	MS02 ASSY CABINET PALMREST(B)						•	•	•					•			•						•	•	•							•			•																						
3	1-963-520-31	MS02 CABLE RJ COMBO (WHITE)	•	•	•	•	•	•		•	•	•	•	•		•	•		•	•	•	•	•				•	•	•	•	•	•			•	•		•	•	•	•	•	•	•	•	•	•	•	•	•	•	•	•	•	•	•	•
	1-963-520-21	CABLE RJ COMBO (B)						•	•	•					•			•						•	•	•							•			•																						
4	1-479-153-11	KEYBOARD UNIT (JP)	•	•	•	•	•	•		•																																																		
	1-479-153-21	KEYBOARD UNIT (US)									•	•	•	•		•	•										•	•	•	•	•	•																		•	•	•			•			
	1-479-153-31	KEYBOARD UNIT (KR)																																																									
	1-479-153-41	KEYBOARD UNIT (TH)																																																									
	1-479-153-51	KEYBOARD UNIT (TW)																																																									
	1-479-153-61	KEYBOARD UNIT (RU)																																																									
	1-479-153-71	KEYBOARD UNIT (CA)																					•																																					
	1-479-154-11	KEYBOARD UNIT (GB)																																	•	•		•	•			•	•	•	•	•												
	1-479-154-21	KEYBOARD UNIT (DE)																																	•	•		•	•			•	•	•	•	•												
	1-479-154-31	KEYBOARD UNIT (CH)																																	•	•		•	•			•		•													
	1-479-154-41	KEYBOARD UNIT (FR)																																	•	•		•	•			•	•	•	•	•												
	1-479-154-51	KEYBOARD UNIT (IT)																																	•	•		•	•			•	•	•	•	•												
	1-479-154-61	KEYBOARD UNIT (LA)																	•	•	•	•																																					
	1-479-154-71	KEYBOARD UNIT (ES)																																	•	•		•	•			•	•	•													
	1-479-154-91	KEYBOARD UNIT (PT)																																				•																				
	1-479-375-11	KEYBOARD UNIT (JP)(GRAY)						•	•	•																																																		
	1-479-375-21	KEYBOARD UNIT (US)(GRAY)													•			•																																									
	1-479-375-31	KEYBOARD UNIT (AP)(GRAY)																						•	•	•																																
	1-479-376-11	KEYBOARD UNIT (NL)(GRAY)																																•			•																				
	1-479-376-21	KEYBOARD UNIT (DE)(GRAY)																																•			•																				
	1-479-376-31	KEYBOARD UNIT (CH)(GRAY)																																			•																				
	1-479-376-41	KEYBOARD UNIT (FR)(GRAY)																																•			•																				
	1-479-376-51	KEYBOARD UNIT (IT)(GRAY)																																•			•																				
	1-479-376-61	KEYBOARD UNIT (ES)(GRAY)																																			•																				
	1-479-376-71	KEYBOARD UNIT (SE)(GRAY)																																			•																				
5	1-796-911-21	TOUCHPAD	•	•	•	•	•	•		•	•	•	•	•		•	•		•	•	•	•	•				•	•	•	•	•	•			•	•		•	•	•	•	•	•	•	•	•	•	•	•	•	•	•	•	•	•	•	•
	1-796-911-12	TOUCHPAD (GRAY)						•	•	•					•			•						•	•	•							•			•																						
⚠1 [CHG] 9	2-546-282-02	MS02 PALMREST LENS (WHITE)	•	•	•			•		•	•	•	•	•		•	•		•	•	•	•	•				•	•	•	•	•	•			•	•		•	•	•	•	•	•	•	•	•	•	•	•	•	•	•	•	•	•	•	•
⚠1 [CHG]	2-546-282-21	MS02 PALMREST LENS (GRAY)						•	•	•					•			•						•	•	•							•			•																						
⚠1 [CHG]	2-546-282-12	MS02 PALMREST LENS W/O PRINTING (WHITE)				•	•	•		•																																																	
⚠1 [CHG]	2-546-282-31	MS02 PALMREST LENS W/O PRINTING (GRAY)						•	•	•																																																
10	2-546-281-01	MS01 WLAN BUTTON	•	•	•			•	•	•	•	•	•	•	•	•	•	•	•	•	•	•	•	•	•	•	•	•	•	•	•	•	•	•	•	•	•	•	•	•	•	•	•	•	•	•	•	•	•	•	•	•	•	•	•	•	•
	2-546-283-01	MS01 PRETENDED WLAN BUTTON				•	•	•	•	•																																																

⚠2 [MA] ⚠2 [MA]

Sony Confidential

M-1. Main Board

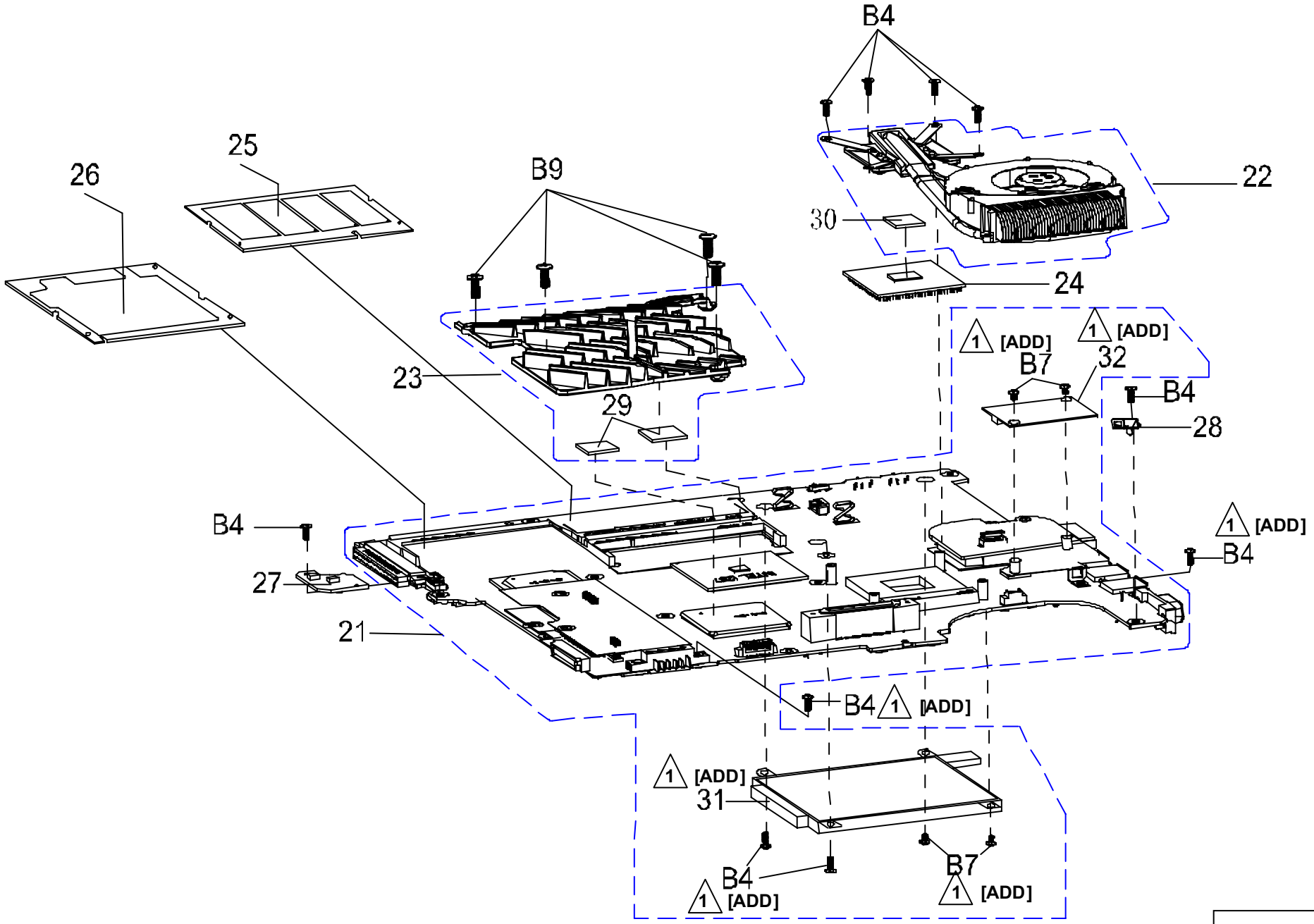

Sony Confidential

M-1. Main Board

	Ref.No.	Part No.	Description
	22	A-1093-218-A	MS01 ASSY THERMAL
	23	A-1093-219-B	MS01 ASSY THERMAL VGA
	28	2-546-280-01	MS01 DC IN BRACKET
	29	2-592-555-01	MS01 THERMAL SHEET VGA
	30	2-592-554-01	MS01 THERMAL SHEET
⚠1 [ADD]	32	1-417-539-12	MDC MODULE
	B4		GRIP, M2
	B7		SCREW, M2 SPECIAL HEAD, EG GRIP
	B9		SCREW, M2 SPECIAL HEAD, EG GRIP

* : CTO Model

			J								AM																							EU													AO									
Ref.No.	Part No.	Description	FS71B	FS51B	FS31B	FS21B	FS21	FS91PS*	FS91PSY*	FS91S*	FS680	FS660P	FS660	FS640	FS675P	FS635B	FS625B	FS645P	FS670FG	FS650F	FS630F	FS615F	FS640Q	FS655FP	FS640FP	FS610FP	FS620P	FS620	FS630	FS690P*	FS690B*	FS690*	FS690BH*	FS295XP	FS215Z	FS215M	FS295VP	FS215B	FS215E	FS215SR	FS215MR	FS285M	FS285B	FS285E	FS215S	FS285H	FS28C	FS25C	FS28GP	FS28SP	FS28LP	FS28TP	FS25GP	FS25SP	FS25LP	FS25TP
21	A-1117-271-A	MS01 PWA ALL (FOR HIGH)	●					●		●	●	●	●																	●	●	●	●		●	●				●	●	●			●	●	●		●	●	●	●	●	●	●	●
	A-1117-275-A	MS01 PWA ALL (FOR LOW)		●	●	●	●	●		●				●		●	●		●	●	●	●	●				●	●	●	●	●	●	●					●	●				●	●				●								
	A-1117-309-A	MS02 PWA ALL (FOR HIGH)(B)						●	●	●					●			●																●			●																			
	A-1123-501-A	MS02 PWA ALL (FOR LOW)(B)						●	●	●														●	●	●																														
24	6-707-261-01	CPU PM2.13						●	●	●																				●	●	●	●																							
	6-707-260-01	CPU PM2.0																												●	●	●	●																●	●	●	●				
	6-707-259-01	CPU PM1.86	●								●				●				●											●	●	●	●	●						●					●											
	6-707-258-01	CPU PM 1.73		●				●	●	●		●	●							●				●					●	●	●	●	●		●	●	●	●			●	●	●			●	●						●	●	●	●
	6-707-252-01	CPU PM1.6												●		●	●	●					●		●		●	●		●	●	●	●																							
	6-707-268-01	CPU CEL-M1.5			●			●	●	●																													●					●												
	6-707-715-01	CPU CEL-M1.4				●	●	●	●	●											●	●				●				●	●	●	●															●								
25	6-705-096-01	RAM Infineon 512 MB						●	●	●	●	●	●		●	●								●						●	●	●	●														●		●	●	●	●	●	●	●	●
	6-707-648-01	RAM Hynix 512 MB																																●			●					●														
	6-707-611-01	RAM Hynix 256 MB																																														●								
	6-707-657-01	RAM Sumsung 256 MB	●	●	●	●	●																																																	
	6-707-029-01	RAM Infineon 256 MB						●	●	●				●			●	●	●	●	●	●	●		●	●	●	●	●	●	●	●	●		●	●		●	●	●	●		●	●	●	●										
26	1-761-864-51	WIRELESS LAN CARD (b/g FOR US/CA/TW)									●	●	●	●	●	●	●	●	●	●	●	●	●	●	●	●	●	●	●	●	●	●	●																			●				●
	1-761-864-61	WIRELESS LAN CARD (b/g FOR JP)	●	●				●	●	●																																														
	1-761-864-71	WIRELESS LAN CARD (b/g FOR EU/ASIA)																																●	●	●	●	●	●	●	●	●	●	●	●	●	●	●	●	●	●		●	●	●	
	1-789-095-51	WIRELESS LAN CARD (a/b/g FOR US)																												●	●	●	●																							
	1-789-014-22	WIRELESS LAN CARD (b/g FOR JP)			●																																																			
27	A-1117-455-A	MS02 PWA ANTENNA	●	●	●			●	●	●	●	●	●	●	●	●	●	●	●	●	●	●	●	●	●	●	●	●	●	●	●	●	●	●	●	●	●	●	●	●	●	●	●	●	●	●	●	●	●	●	●	●	●	●	●	●
⚠1 [ADD] 31	1-819-779-11	PCMCIA SOCKET (WHITE)	●	●	●	●	●				●	●	●	●		●	●		●	●	●	●	●				●	●	●	●	●	●	●		●	●		●	●	●	●	●	●	●	●	●	●	●	●	●	●	●	●	●	●	●	●	●
	1-819-779-21	PCMCIA SOCKET (GRAY)						●	●	●					●			●						●	●	●								●			●																			
																													⚠2 [MA]				⚠2 [MA]																							

Sony Confidential

B-1.Bottom

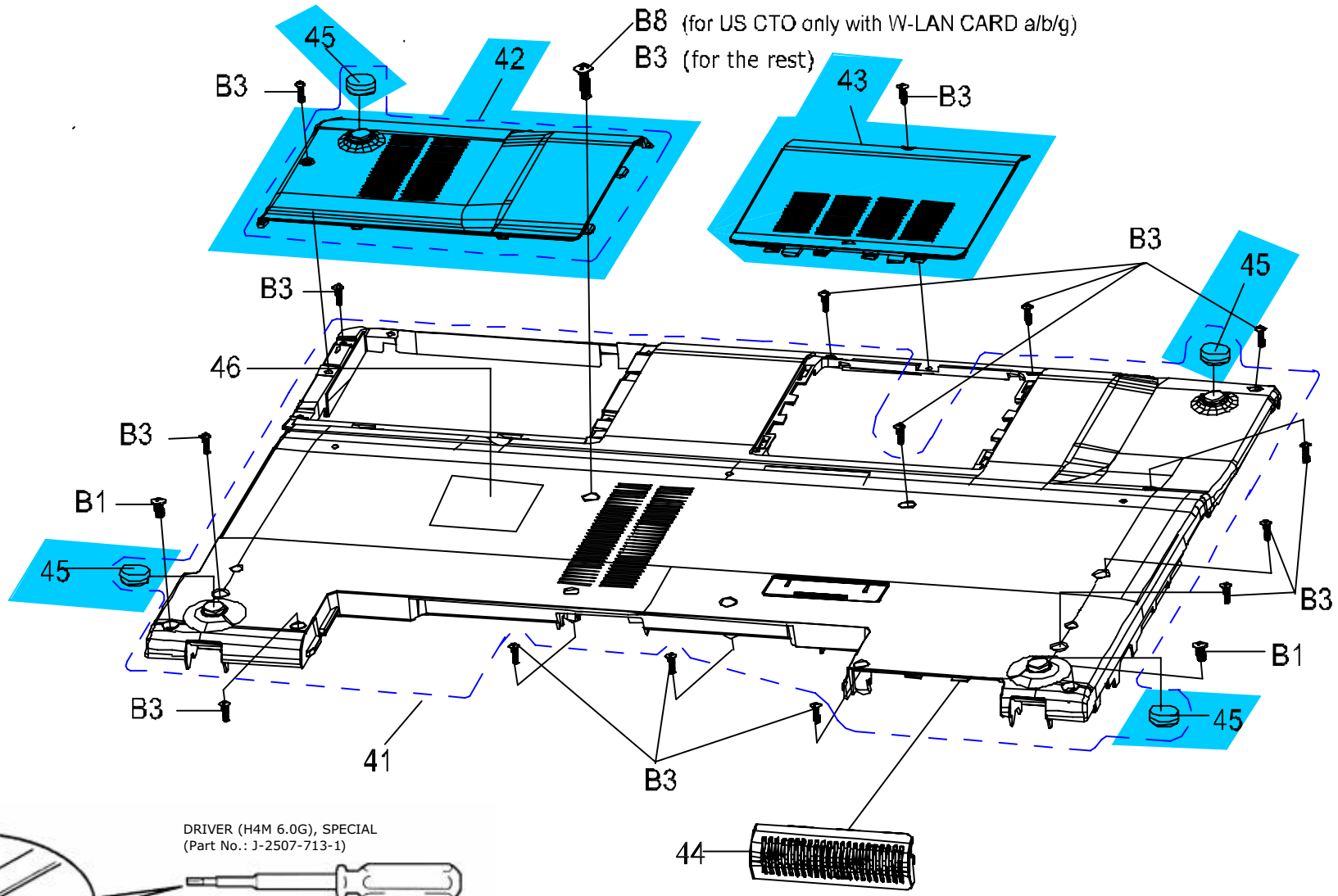

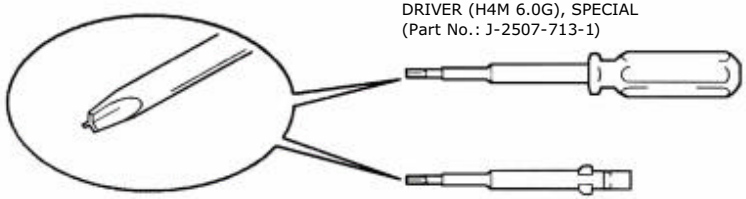

DRIVER (H4M 6.0G), SPECIAL
(Part No.: J-2507-713-1)

BIT (H4 5.0G), SPECIAL
(Part No.: J-2507-712-1)

Note: For B8 removal, a special Tool Shown as right is needed.

Sony Confidential

B-1. Bottom

Ref.No.	Part No.		Description
41	X-2050-581-2		MS01 ASSY CABINET BOTTOM
42	X-2050-587-2	&	MS01 ASSY HDD DOOR
43	X-2050-582-1	&	MS01 ASSY RAM DOOR
44	2-546-276-01		MS01 COVER THERMAL OUTLET
45	2-546-274-02	&	MS01 RUBBER FOOT
B1			SCREW M3
B3			SCREW (M2),EXTERIOR VIEW

＊:CTO Model

	Ref.No.	Part No.	Description	J								AM																										EU															AO									
				FS71B	FS51B	FS31B	FS21B	FS21	FS91PS＊	FS91PSY＊	FS91S＊	FS680	FS660P	FS660	FS640	FS675P	FS635B	FS625B	FS645P	FS670FG	FS650F	FS630F	FS615F	FS640Q	FS655FP	FS640FP	FS610FP	FS620P	FS620	FS630	FS690P＊	FS690B＊	FS690＊	FS690BH＊	FS295XP	FS215Z	FS215M	FS295VP	FS215B	FS215E	FS215SR	FS215MR	FS285M	FS285B	FS285E	FS215S	FS285H	FS28C	FS25C	FS28GP	FS28SP	FS28LP	FS28TP	FS25GP	FS25SP	FS25LP	FS25TP
	2-629-450-01	LABEL,MODEL NUMBER(J)	●	●	●																																																					
	2-629-450-12	LABEL,MODEL NUMBER(J)				●	●																																																			
	2-632-273-01	LABEL,MODEL NUMBER(JCTO) (w/ W-LAN)						●	●	●																																																		
	2-632-273-11	LABEL,MODEL NUMBER(JCTO) (w/o W-LAN)						●	●	●																																																		
	2-629-459-01	LABEL,MODEL NUMBER (U)									●	●	●	●	●	●	●	●					●				●	●	●																														
	2-629-462-01	LABEL,MODEL NUMBER (LA)																		●																																							
	2-629-462-11	LABEL,MODEL NUMBER (LA)																			●																																					
	2-629-462-21	LABEL,MODEL NUMBER (LA)																				●																																				
	2-629-462-31	LABEL,MODEL NUMBER (LA)																					●																																			
	2-629-462-41	LABEL,MODEL NUMBER (LA)																							●																																	
	2-629-462-51	LABEL,MODEL NUMBER (LA)																								●																																
	2-629-462-61	LABEL,MODEL NUMBER (LA)																									●																															
	2-632-766-01	LABEL,MODEL NUMBER (UCTO) W-LAN(a/b/g)																												●	●	●	●																									
	2-632-766-11	LABEL,MODEL NUMBER (UCTO) W-LAN(b/g)																												●	●	●	●																									
	46	2-629-460-01	LABEL,MODEL NUMBER (E)																																●	●	●	●	●	●			●	●	●	●	●											
		2-631-118-01	LABEL,MODEL NUMBER (E)																																						●																	
		2-631-118-11	LABEL,MODEL NUMBER (E)																																							●																
⚠[CHG]		2-650-446-01	LABEL,MODEL NUMBER (C)																																																					●				
⚠[CHG]		2-650-446-11	LABEL,MODEL NUMBER (C)																																																					●				
		2-630-724-01	LABEL,MODEL NUMBER (I)																																																						●				
		2-630-724-11	LABEL,MODEL NUMBER (I)																																																						●				
		2-630-724-21	LABEL,MODEL NUMBER (I)																																																							●				
		2-630-724-31	LABEL,MODEL NUMBER (I)																																																							●				
		2-630-725-01	LABEL,MODEL NUMBER (SG)																																																						●				
		2-630-725-11	LABEL,MODEL NUMBER (SG)																																																						●				
		2-630-726-01	LABEL,MODEL NUMBER (K																																																								●			
		2-630-726-11	LABEL,MODEL NUMBER (K																																																									●		
		2-630-727-01	LABEL,MODEL NUMBER (TW)																																																									●		
		2-630-727-11	LABEL,MODEL NUMBER (TW)																																																										●
	B8	4-681-432-01	SPECIAL SCREW (M2) (SPIN)																												●	●	●	●																									

⚠2 [MA] ⚠2 [MA]

Sony Confidential

C-1. CABINET KBCOVER

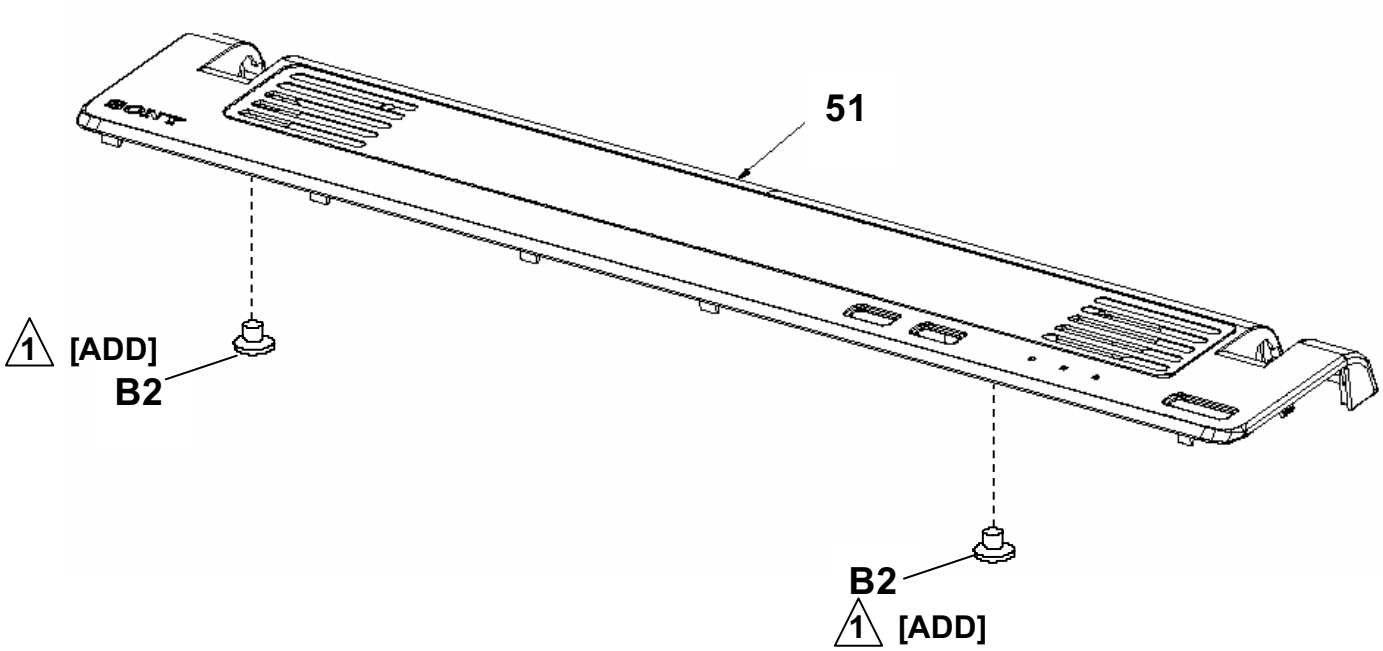

Ref.No.	Part No.	Description
51	X-2048-486-1	MS01 CABINET KBCOVER
B2		APPEARANCE SCREW M2 M2 1.6mm Black

Sony Confidential

L-1. LCD

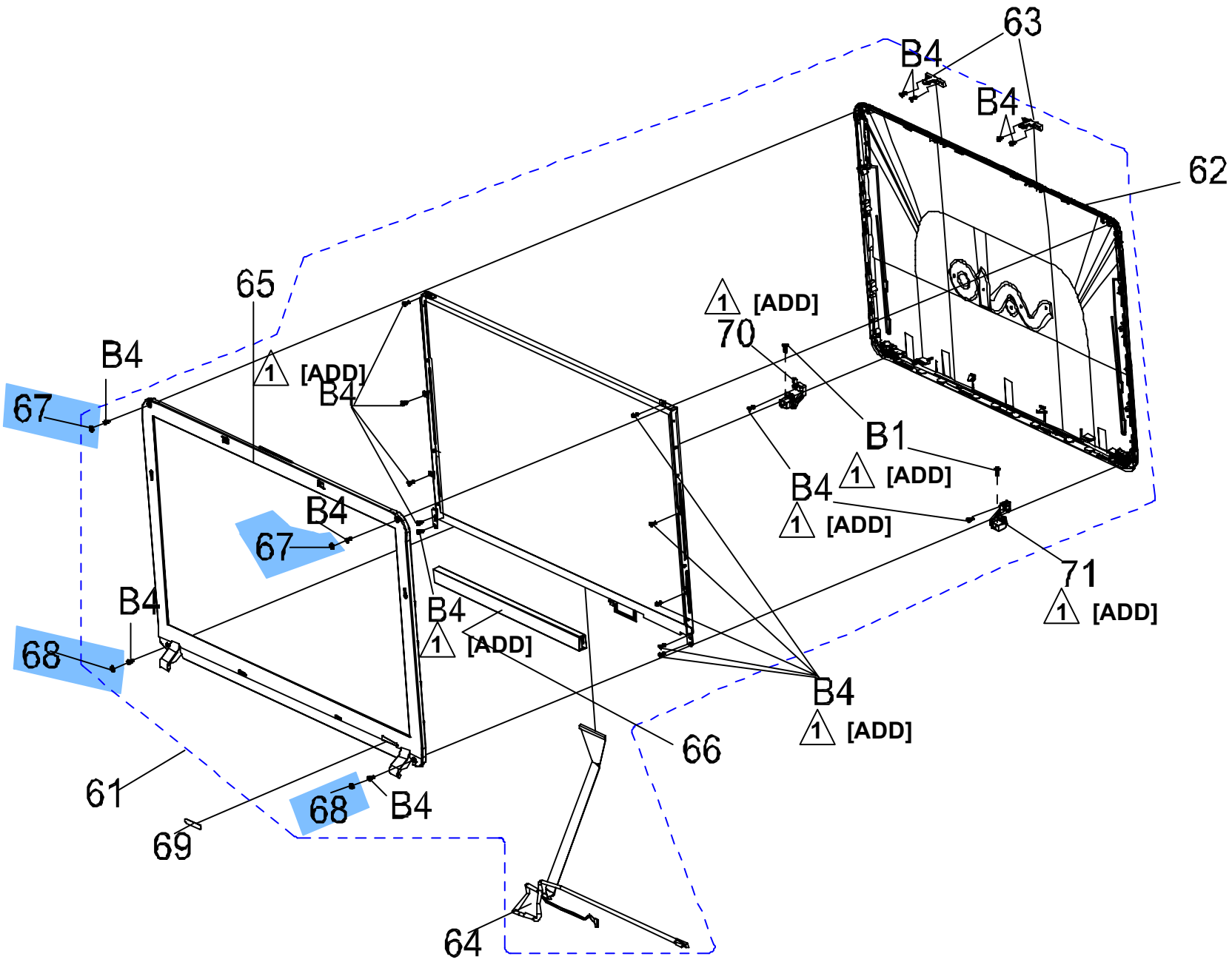

Sony Confidential

L-1. LCD

Ref.No	Part No.	Description
63	2-546-200-01	MS01 LCD HOOK
65	X-2050-578-1	MS01 SUBASSY LCD BEZEL
67	2-546-209-01	& MS01 LCD RUBBER ROUND
68	2-587-393-01	& MS01 LCD RUBBER ROUND DOWN
⚠ [ADD] 70	2-546-203-01	MS01 HINGE LEFT
⚠ [ADD] 71	2-546-204-01	MS01 HINGE RIGHT
B1		SCREW,M3
B4		GRIP,M2 M2 5mm Silver

How to Use Parts Differently
FS25GP uses the two different type of LCD (QDI type,and Hitachi type).
When replacing the LCD,use the QDI type parts for the QDI type LCD,and Hitachi type parts for the Hitachi type LCD.
Replace the peripheral parts of LCD with the same type in the same way.
[How to identify the QDI and Hitachi types of parts]

Type QDI (rear view)

(A-1133-649-A)

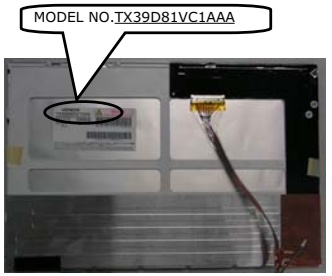

Type Hitachi (rear view)

(A-1108-878-A)

NOTE:
- Q for QDI LCD
- H for Hitachi LCD

* :CTO Model

	Ref.No.	Part No.	Description	J								AM																												EU																		AO									
				FS71B	FS51B	FS31B	FS21B	FS21	FS91PS*	FS91PSY*	FS91S*	FS680	FS660P	FS660	FS640	FS675P	FS635B	FS625B	FS645P	FS670FG	FS650F	FS630F	FS615F	FS640Q	FS655FP	FS640FP	FS610FP	FS620P	FS620	FS630	FS690P*	FS690B*	FS690*	FS690BH*	FS295XP	FS215Z	FS215M	FS295VP	FS215B	FS215E	FS215SR	FS215MR	FS285M	FS285B	FS285E	FS215S	FS285H	FS28C	FS25C	FS28GP	FS28SP	FS28LP	FS28TP	FS25GP	FS25SP	FS25LP	FS25TP
	61	A-1133-649-A	ASSY LCD (BR-WLAN)(Q)(S)(WHITE)				●	●							●		●	●			●	●	●	●				●	●	●	●	●	●	●						●				●	●			●	●			●	●	●	●
⚠	[ADD]	A-1108-878-A	ASSY LCD (BR-WLAN)(S)(WHITE)																																																				●			
		A-1133-650-A	ASSY LCD (HC-SXGA+-WLAN)(S)(WHITE)	●					●		●																																													
		A-1133-651-A	ASSY LCD (HC-WXGA-WLAN)(S)(WHITE)		●	●			●		●	●	●	●						●																●	●		●		●	●	●			●	●			●	●	●	●				
		A-1127-877-A	ASSY LCD (BR-WLAN)(Q)(S)(GRAY)																						●	●	●								●			●																			
		A-1127-878-A	ASSY LCD (HC-SXGA+-WLAN)(S)(GRAY)						●	●	●																																														
		A-1127-879-A	ASSY LCD (HC-WXGA-WLAN)(S)(GRAY)						●	●	●						●			●																																						
	62	X-2048-459-1	MS01 SUBASSY LCD HOUSING (WHITE)	●	●	●	●	●	●		●	●	●	●	●		●	●		●	●	●	●	●				●	●	●	●	●	●	●		●	●		●	●	●	●	●	●	●	●	●	●	●	●	●	●	●	●	●	●	●	●	●	●	●	●
		A-1128-260-A	MS01 SUBASSY LCD HOUSING (GRAY)						●	●	●						●			●					●	●	●								●			●																			
⚠	[ADD]	1-963-755-11	MS01 LCD CABLE (single)																																																				●H			
	64	1-963-755-21	MS02 LCD CABLE (single)				●	●							●		●	●			●	●	●	●	●	●	●	●	●	●	●	●	●	●	●			●		●				●	●			●	●					●Q	●	●	●
		1-963-756-21	MS02 LCD CABLE (dual)	●	●	●			●	●	●	●	●	●		●			●	●																●	●		●		●	●	●			●	●			●	●	●	●				
⚠	[ADD]	1-478-805-12	NEC-TOKIN LCD INVERTER (single)																																																				●H			
		1-478-805-31	NEC-TOKIN LCD INVERTER (single)				●	●							●		●	●			●	●	●	●	●	●	●	●	●	●	●	●	●	●	●			●		●				●	●			●	●					●Q	●	●	●
⚠	[ADD]	1-479-137-22	NEC-TOKIN LCD INVERTER (dual)	●					●	●	●					●			●																																							
⚠	[DEL]	1-479-137-13	NEC-TOKIN LCD INVERTER (dual)		●	●			●	●	●	●	~~●~~	~~●~~		~~●~~			~~●~~	●																	●	●		●		●	●	●			●	●			●	●	●	●				
⚠	[ADD]	1-479-136-11	MURATA MPV5802 (dual)										●	●																																											
	69	2-629-466-01	LABEL ID(J)	●																																																					
		2-629-466-11	LABEL ID(J)		●																																																			
		2-629-466-21	LABEL ID(J)			●																																																		
		2-629-466-31	LABEL ID(J)				●																																																	
		2-629-466-41	LABEL ID(J)					●																																																
		2-632-273-01	LABEL ID(JCTO)						●																																															
		2-632-273-21	LABEL ID(JCTO)							●																																														
		2-632-273-11	LABEL ID(JCTO)								●																																													
		2-629-467-01	LABEL ID(U)									●																																												
		2-629-467-11	LABEL ID(U)										●																																											
		2-629-467-21	LABEL ID(U)											●																																										

△2 [MA] △2 [MA]

Sony Confidential

L-1. LCD

* :CTO Model

	Ref.No.	Part No.	Description	J								AM																							EU													AO									
				FS71B	FS51B	FS31B	FS21B	FS21	FS91PS*	FS91PSY*	FS91S*	FS680	FS660P	FS660	FS640	FS675P	FS635B	FS625B	FS645P	FS670FG	FS650F	FS630F	FS615F	FS640Q	FS655FP	FS640FP	FS610FP	FS620P	FS620	FS630	FS690P*	FS690B*	FS690*	FS690BH*	FS295XP	FS215Z	FS215M	FS295VP	FS215B	FS215E	FS215SR	FS215MR	FS285M	FS285B	FS285E	FS215S	FS285H	FS28C	FS25C	FS28GP	FS28SP	FS28LP	FS28TP	FS25GP	FS25SP	FS25LP	FS25TP
		2-629-467-31	LABEL ID(U)												●																																										
		2-629-467-41	LABEL ID(U)													●																																									
		2-629-467-51	LABEL ID(U)														●																																						
		2-629-467-61	LABEL ID(U)															●																																					
		2-629-467-81	LABEL ID(U)																●																																				
		2-629-467-91	LABEL ID(U)																					●																															
		2-635-826-01	LABEL ID(U)																									●																											
		2-635-826-11	LABEL ID(U)																										●																										
⚠2 [MA]		2-635-826-21	LABEL ID(U)																											●																									
		2-630-627-01	LABEL ID(LAÇ)																	●																																			
		2-630-627-11	LABEL ID(LAÇ)																		●																																		
		2-630-627-21	LABEL ID(LAÇ)																			●																																	
		2-630-627-31	LABEL ID(LAÇ)																				●																																
		2-630-627-41	LABEL ID(LAÇ)																						●																														
		2-630-627-51	LABEL ID(LAÇ)																							●																													
		2-630-627-61	LABEL ID(LAÇ)																								●																												
⚠ [CHG]		2-650-447-01	LABEL ID(LAÇ)																																															●									
⚠ [CHG]		2-650-447-11	LABEL ID(LAÇ)																																																●								
		2-632-767-11	LABEL ID(UCTO)																												●																										
		2-632-767-21	LABEL ID(UCTO)																													●																									
		2-632-767-01	LABEL ID(UCTO)																														●																								
⚠2 [MA]	69	2-632-767-31	LABEL ID(UCTO)																															●																							
		2-630-630-01	LABEL ID(E)																																●																						
		2-630-630-11	LABEL ID(E)																																	●																					
		2-630-630-21	LABEL ID(E)																																		●																				
		2-630-630-31	LABEL ID(E)																																			●																			
		2-630-630-41	LABEL ID(E)																																				●																		
		2-630-630-51	LABEL ID(E)																																					●																	
		2-630-630-61	LABEL ID(E)																																						●																
		2-630-630-71	LABEL ID(E)																																							●															
		2-630-630-81	LABEL ID(E)																																								●														
		2-630-630-91	LABEL ID(E)																																									●													
		2-630-639-01	LABEL ID(E)																																										●												
		2-630-639-11	LABEL ID(E)																																											●											
		2-630-639-21	LABEL ID(E)																																												●										
		2-630-672-01	LABEL ID(GVD)																																															●							
		2-630-672-11	LABEL ID(GVD)																																																●						
		2-630-672-21	LABEL ID(GVD)																																																	●					
		2-630-672-31	LABEL ID(GVD)																																																		●				
		2-630-672-41	LABEL ID(GVD)																																																			●			
		2-630-672-51	LABEL ID(GVD)																																																				●		
		2-630-672-61	LABEL ID(GVD)																																																					●	
		2-630-672-71	LABEL ID(GVD)																																																						●
																														⚠2 [MA]				⚠2 [MA]																							

Sony Confidential

D-1.ODD

	Ref.No.	Part No.	Description
1 [ADD]	83	2-546-291-01	MS01 ODD BRACKET BACK
1 [ADD]	84	2-546-292-01	MS01 ODD BRACKET FRONT
	B4		GRIP,M2
	B6		SCREW,SPECIAL HEAD

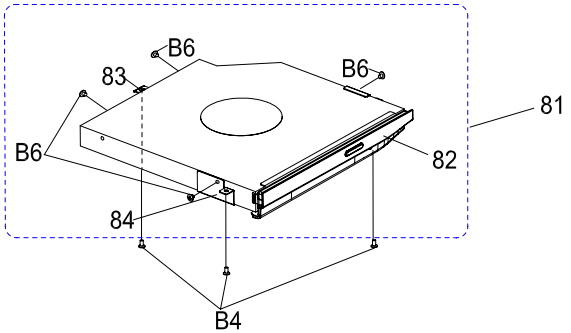

*:CTO Model

Ref.No.	Part No.	Description	J								AM																								EU												AO									
			FS71B	FS51B	FS31B	FS21B	FS21	FS91PS*	FS91PSY*	FS91S*	FS680	FS660P	FS660	FS640	FS675P	FS635B	FS625B	FS645P	FS670FG	FS650F	FS630F	FS615F	FS640Q	FS655FP	FS640FP	FS610FP	FS620P	FS620	FS630	FS690P*	FS690B*	FS690*	FS690BH*	FS295XP	FS215Z	FS215M	FS295VP	FS215B	FS215E	FS215SR	FS215MR	FS285M	FS285B	FS285E	FS215S	FS285H	FS28C	FS25C	FS28GP	FS28SP	FS28LP	FS28TP	FS25GP	FS25SP	FS25LP	FS25TP
81	A-1127-944-A	MS01 ASSY ODD HITACHI DW(W)				•																																																			
	A-1127-946-A	MS01 ASSY ODD PANA(W-SM+DL)(W)	•	•	•		•	•		•																																														
	A-1127-947-A	MS01 ASSY ODD PANA(B-SM+DL)(B)						•	•	•																																														
	A-1127-948-A	MS01 ASSY ODD PANA(DVD+DL)(W)										•	•	•									•																																	
	A-1127-949-A	MS01 ASSY ODD PANA(DVD+DL)(B)													•			•																																						
	A-1127-951-A	MS01 ASSY ODD SONY(DVD+DL)(W)									•								•	•	•									•	•	•	•												•	•	•									
	A-1127-952-A	MS01 ASSY ODD SONY(DVD+DL)(B)																						•																																
	A-1127-953-A	MS01 ASSY ODD Pioneer(DVD+DL)(W)																																	•	•		•	•	•	•	•	•	•										
	A-1127-954-A	MS01 ASSY ODD Pioneer(DVD+DL)(B)																																•			•																		
	A-1127-955-A	MS01 ASSY ODD QSI (SBW 242C)(W)																																																						
	A-1127-956-A	MS01 ASSY ODD QSI (SBW 243)(W)						•		•						•	•						•					•	•	•	•	•	•	•																					
	A-1127-957-A	MS01 ASSY ODD QSI (SBW 243)(B)						•	•	•															•	•																														
	A-1127-958-A	MS01 ASSY ODD TOSHIBA(C2732)(W)						•		•																				•	•	•	•																						
	A-1127-959-A	MS01 ASSY ODD TOSHIBA(C2732)(B)						•	•	•																																														
1 [ADD] 82	X-2055-772-1	SUB ASSY MULTI BEZEL	•	•	•	•	•	•		•	•	•	•	•		•	•		•	•	•	•	•				•	•	•	•	•	•	•		•	•		•	•	•	•	•	•	•	•	•			•	•	•	•	•	•	•	•
	X-2055-780-1	SUB ASSY MULTI BEZEL (B)						•	•	•					•			•						•	•	•								•			•																		
	X-2059-825-1	SUB ASSY MULTI BEZEL												•																																										
	X-2059-752-1	SUB ASSY MULTI BEZEL																																																					

2 [MA] 2 [MA]

Sony Confidential

H-1.HDD

	Ref.No.	Part No.	Description
1 [ADD]	92	A-1092-487-A	MS01 SUBASSY HDD BRACKET
	B3		SCREW (M2),EXTERIOR VIEW
	B5		SCREW,SPECIAL HEAD

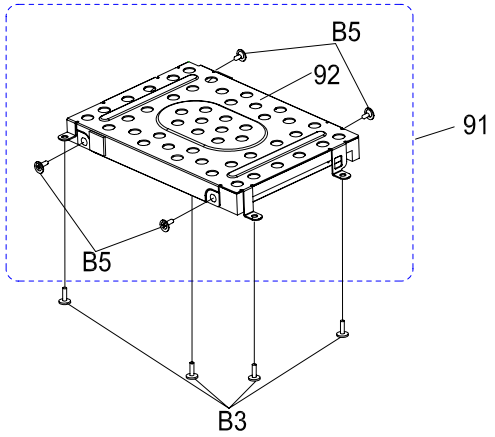

*:CTO Model

			J								AM																							EU													AO									
Ref.No.	Part No.	Description	FS71B	FS51B	FS31B	FS21B	FS21	FS91PS*	FS91PSY*	FS91S*	FS680	FS660P	FS660	FS640	FS675P	FS635B	FS625B	FS645P	FS670FG	FS650F	FS630F	FS615F	FS640Q	FS655FP	FS640FP	FS610FP	FS620P	FS620	FS630	FS690P*	FS690B*	FS690*	FS690BH*	FS295XP	FS215Z	FS215M	FS295VP	FS215B	FS215E	FS215SR	FS215MR	FS285M	FS285B	FS285E	FS215S	FS285H	FS28C	FS25C	FS28GP	FS28SP	FS28LP	FS28TP	FS25GP	FS25SP	FS25LP	FS25TP
	A-1127-960-A	MS02 ASSY HDD 100GB (FJ)	•								•																																														
	A-1127-961-A	MS02 ASSY HDD 100GB (TO)		•				•	•	•					•															•	•	•	•	•	•					•					•											
	A-1108-903-A	MS01 ASSY HDD 80GB (HI)												•				•	•				•	•			•	•	•							•					•															
	A-1127-962-A	MS02 ASSY HDD 80G (FJ)																																			•					•	•	•		•										
	A-1108-905-A	MS01 ASSY HDD 80G (TO)			•			•	•	•		•	•																	•	•	•	•																•	•	•	•				
91	A-1108-906-A	MS01 ASSY HDD 60GB (HI)																																				•	•																	
	A-1127-963-A	MS02 ASSY HDD 60G (FJ)				•										•				•					•																												•	•	•	•
	A-1108-908-A	MS01 ASSY HDD 60G (TO)					•	•	•	•																				•	•	•	•																							
	A-1108-909-A	MS01 ASSY HDD 40G (TO)																																													•	•								
	A-1108-910-A	MS01 ASSY HDD 40GB (HI)						•	•	•							•				•	•				•				•	•	•	•																							
	A-1108-911-A	MS01 ASSY HDD 30GB (HI)																												•	•	•	•																							

2 [MA] 2 [MA]

Sony Confidential

A-1. ACCESSORIES

2001
Memory Card Adapter

2006
AC Adapter

2031
SPEAKER

2035
RAY-CATCHER

2004
Floppy Disk Drive

2007
Battery Pack

2032
Adapter, AC (SPEAKER)

2036
REMOTE COMMANDER

2005
Power Cord

2030
Port Replicator

Refer to A -2 . Accessories

2034
CORD, POWER (SPEAKER)

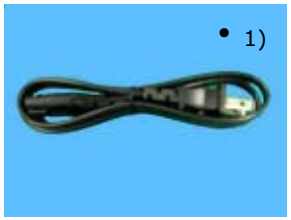

2037
RF C ORD WITH F TERMINAL

• 1) The Ref. 2030-2037
are included only in the models supplied with the Port Replicator.

Sony Confidential

A-1. ACCESSORIES

＊: CTO Model

			⚠[COR]		J								AM																							EU													AO									
	Ref.No.	Part No.		Description	FS71B	FS51B	FS31B	FS21B	FS21	FS91PS＊	FS91PSY*	FS91S＊	FS680	FS660P	FS660	FS640	FS675P	FS635B	FS625B	FS645P	FS670FG	FS650F	FS630F	FS615F	FS640Q	FS655FP	FS640FP	FS610FP	FS620P	FS620	FS630	FS690P＊	FS690B＊	FS690＊	FS690BH*	FS295XP	FS215Z	FS215M	FS295VP	FS215B	FS215E	FS215SR	FS215MR	FS285M	FS285B	FS285E	FS215S	FS285H	FS28C	FS25C	FS28GP	FS28SP	FS28LP	FS28TP	FS25GP	FS25SP	FS25LP	FS25TP
	2001	1-478-615-11	&≡	MEMORY CARD ADAPTER	•	•	•	•	•	•	•	•																																																	
	2004	1-476-818-21	&≡	FDD VGP-UFD1		•	•																																																			
		1-827-160-21	&	POWER CORD FOR JP	•	•	•	•	•	•	•	•																																																		
		1-829-237-21	&	POWER CORD FOR US									•	•	•	•	•	•	•	•	•	•	•	•	•	•	•	•	•	•	•	•	•	•	•																							
		1-827-946-31	&	POWER CORD FOR E(GB)																																•	•	•	•	•	•			•	•	•	•	•										
		1-827-481-21	&	POWER CORD FOR E(NON GB)																																•	•	•	•	•	•			•	•	•	•	•										
		1-830-375-11	&	POWER CORD FOR E(RU)																																						•	•															
	⚠ 2005	1-827-945-21	&	POWER CORD FOR I(HK)																																															•				•			
		1-823-947-33	&	POWER CORD FOR I(KOREA)																																																	•				•	
		1-824-910-41	&	POWER CORD FOR I(HK)																																															•				•			
		1-830-518-21	&	POWER CORD FOR I(TAIWAN)																																																		•				•
		1-827-481-21	&	POWER CORD FOR I(THAILAND)																																																•				•		
		1-827-947-21	&	POWER CORD FOR C																																												•	•								
⚠[CHG]		1-479-116-12	&≡	ADAPTER AC19V11	•	•	•	•	•					•	•	•	•	•	•	•					•				•	•	•					•		•	•	•	•			•	•	•	•	•										
⚠[CHG]		1-479-116-31	&≡	ADAPTER AC19V11	•	•	•	•	•					•	•	•	•	•	•	•					•				•	•	•					•		•	•	•	•			•	•	•	•	•										
⚠[CHG]		1-479-114-23	&≡	ADAPTER AC19V10						•	•	•										•	•	•		•	•	•				•	•	•	•														•	•	•	•	•	~~•~~	•	•	•	~~•~~
⚠[CHG]	⚠ 2006	1-479-114-31	&≡	ADAPTER AC19V10						•	•	•										•	•	•		•	•	•				•	•	•	•														•	•	•	•	•	~~•~~	•	•	•	~~•~~
⚠[ADD]		1-479-114-41	&≡	ADAPTER AC19V10						•	•	•										•	•	•		•	•	•				•	•	•	•														•	•	•	•	•	•	•	•	•	•
		1-479-231-11	&≡	ADAPTER AC19V12																																						•	•															
		1-479-388-11	&≡	ADAPTER AC19V9									•								•											•	•	•	•		•																					
		A-1114-325-A	&≡	BATTERY 9139 ASSY MAIN BP FOR JP	•	•	•	•	•	•	•	•																																																		
		A-1114-326-A	&≡	BATTERY 9139 ASSY MAIN BP FOR US									•	•	•	•	•	•	•	•									•	•	•	•	•	•	•																								
	⚠ 2007	1-756-531-22	&≡	BATTERY PACK, LITHIUMION for EU/AP																	•	•	•	•	•	•	•	•								•	•	•	•	•	•	•	•	•	•	•	•	•			•	•	•	•	•	•	•	•
⚠[CHG]		1-756-531-51	&≡	BATTERY PACK, LITHIUMION for CHINA																																												•	•								
		A-1072-509-A	&≡	BATTERY PACK BPL2 (U) (S)																												•	•	•	•																							
	2009	1-770-019-61	&	ADAPTOR, CONVERSION PLUG																																															•				•			
	2010	1-816-429-12	&	PHONE PLUG (GB only)																																•	•	•	•	•	•			•	•	•	•	•										
	2030	-		PORT REPLICATOR									•								•											•	•	•	•		•																					
	⚠ 2031	1-478-701-22	&	SPEAKER UNIT									•								•											•	•	•	•		•																					
	⚠ 2032	1-479-364-11	&	ADAPTOR, AC (SPEAKER)									•								•											•	•	•	•		•																					
		1-829-237-21	&	CORD, POWER (U) (SPEAKER)									•								•											•	•	•	•																							
⚠[CHG]	⚠ 2034	1-827-481-21	&	CORD, POWER (E) FR,NL,CH,DE,ES,IT (SPEAKER)																																•																					
		1-827-946-31	&	CORD, POWER (E) GB (SPEAKER)																																•																					
	2035	1-477-218-61	&	RAY-CATCHER UNIT (U)									•								•											•	•	•	•																							
		1-477-218-81	&	RAY-CATCHER UNIT (E)																																•																					
	2036	1-479-183-11	&	REMOTE COMMANDER (RM-VC10U)									•								•											•	•	•	•																							
		1-478-969-12	&	REMOTE COMMANDER (RM-VC10E)																																•																					
	2037	1-829-239-11	&	RF CORD WITH F TERMINAL									•								•											•	•	•	•																							
	-	2-629-393-02	&	MANUAL (XP), INSTRUCTION	•	•	•	•	•	•	•	•																																																
	-	2-630-644-11	&	MANUAL, INSTRUCTION (Port Replicator)									•								•											•	•	•	•																							
⚠[ADD]	-	2-633-048-11	&	WELCOME MAT 3230 (U) (C)									•	•	•	•	•	•	•	•	•	•	•	•	•	•	•	•	•	•	•																											
		2-633-048-21	&	WELCOME MAT 3230 (U) (C)																												•	•	•	•																							
																														⚠2 [MA]				⚠2 [MA]																							

Sony Confidential

A-1. ACCESSORIES

＊: CTO Model

Ref.No.	Part No.		Description	J								AM																												EU																		AO									
				FS71B	FS51B	FS31B	FS21B	FS21	FS91PS＊	FS91PSY*	FS91S＊	FS680	FS660P	FS660	FS640	FS675P	FS635B	FS625B	FS645P	FS670FG	FS650F	FS630F	FS615F	FS640Q	FS655FP	FS640FP	FS610FP	FS620P	FS620	FS630	FS690P＊	FS690B＊	FS690＊	FS690BH*	FS295XP	FS215Z	FS215M	FS295VP	FS215B	FS215E	FS215SR	FS215MR	FS285M	FS285B	FS285E	FS215S	FS285H	FS28C	FS25C	FS28GP	FS28SP	FS28LP	FS28TP	FS25GP	FS25SP	FS25LP	FS25TP
-	2-630-006-11	&	HW SPECS, 3230 (E) A-1(GB)																															●	●		●								●													
	2-630-006-21	&	HW SPECS, 3230 (E) A-1(DE)																															●	●		●								●													
	2-630-006-31	&	HW SPECS, 3230 (E) A-1(FR)																															●	●		●								●													
	2-630-006-41	&	HW SPECS, 3230 (E) A-1(IT)																															●	●		●								●													
	2-630-006-51	&	HW SPECS, 3230 (E) A-1(ES)																																●		●																					
	2-630-006-61	&	HW SPECS, 3230 (E) A-1(NL)																																●		●								●													
	2-630-006-71	&	HW SPECS, 3230 (E) A-1(PT)																																											●													
	2-630-006-81	&	HW SPECS, 3230 (E) A-1																																		●																					
	2-630-006-91	&	HW SPECS, 3230 (E) A-1																																		●																					
	2-630-007-11	&	HW SPECS, 3230 (E) A-2(AGR)																																										●													
	2-630-007-21	&	HW SPECS, 3230 (E) A-2																																		●																					
	2-630-008-11	&	HW SPECS, 3230 (E) B(GB)																																			●		●	●																			
	2-630-008-21	&	HW SPECS, 3230 (E) B(DE)																																			●		●	●																			
	2-630-008-31	&	HW SPECS, 3230 (E) B(FR)																																			●		●	●																			
	2-630-008-41	&	HW SPECS, 3230 (E) B(IT)																																			●		●	●																			
	2-630-008-51	&	HW SPECS, 3230 (E) B(ES)																																			●		●	●																			
	2-630-008-61	&	HW SPECS, 3230 (E) B(NL)																																					●	●																			
	2-630-008-71	&	HW SPECS, 3230 (E) B(PT)																																					●																			
	2-630-008-91	&	HW SPECS, 3230 (E) B(AGR)																																					●																			
	2-630-009-11	&	HW SPECS, 3230 (E) C (GB)																																											●	●	●		●													
	2-630-009-21	&	HW SPECS, 3230 (E) C (DE)																																											●	●	●		●													
	2-630-009-31	&	HW SPECS, 3230 (E) C (FR)																																											●	●	●		●													
	2-630-009-41	&	HW SPECS, 3230 (E) C (IT)																																											●	●	●		●													
	2-630-009-51	&	HW SPECS, 3230 (E) C (ES)																																											●	●	●														
	2-630-009-61	&	HW SPECS, 3230 (E) C																																												●	●														
	2-630-010-01	&	HW SPECS, 3230 (E) D																																								●	●															
-	2-631-656-11	&	TROUBLESHOOTING GUIDE																																														●	●			●	●			
	2-631-656-21	&	TROUBLESHOOTING GUIDE																																															●					●	
	2-631-656-31	&	TROUBLESHOOTING GUIDE																																													●	●							
	2-631-656-41	&	TROUBLESHOOTING GUIDE																																																	●				●
-	2-629-265-11	&	SPEC SHEET (3230G)																																														●	●			●	●			
	2-629-265-21	&	SPEC SHEET (3230G)																																																●					●
	2-629-265-31	&	SPEC SHEET (3230G)																																														●	●							
	2-629-265-41	&	SPEC SHEET (3230G)																																																	●				●
-	2-633-277-11	&	SAFETY/REGULATIONS GUIDE 1 (C)																																														●	●	●	●	●	●	●	●	●
	2-633-277-21	&	SAFETY/REGULATIONS GUIDE 1 (C)																																														●	●							

△2 [MA] △2 [MA]

Sony Confidential

A-2. ACCESSORIES

B20

B21 M3*8 Black

B22 M2*6 Black

B23 M2*8 Black

B24 M3*5 Black

B25 M2*2 Silver

Note: Screw are supplied with B20,a whole set

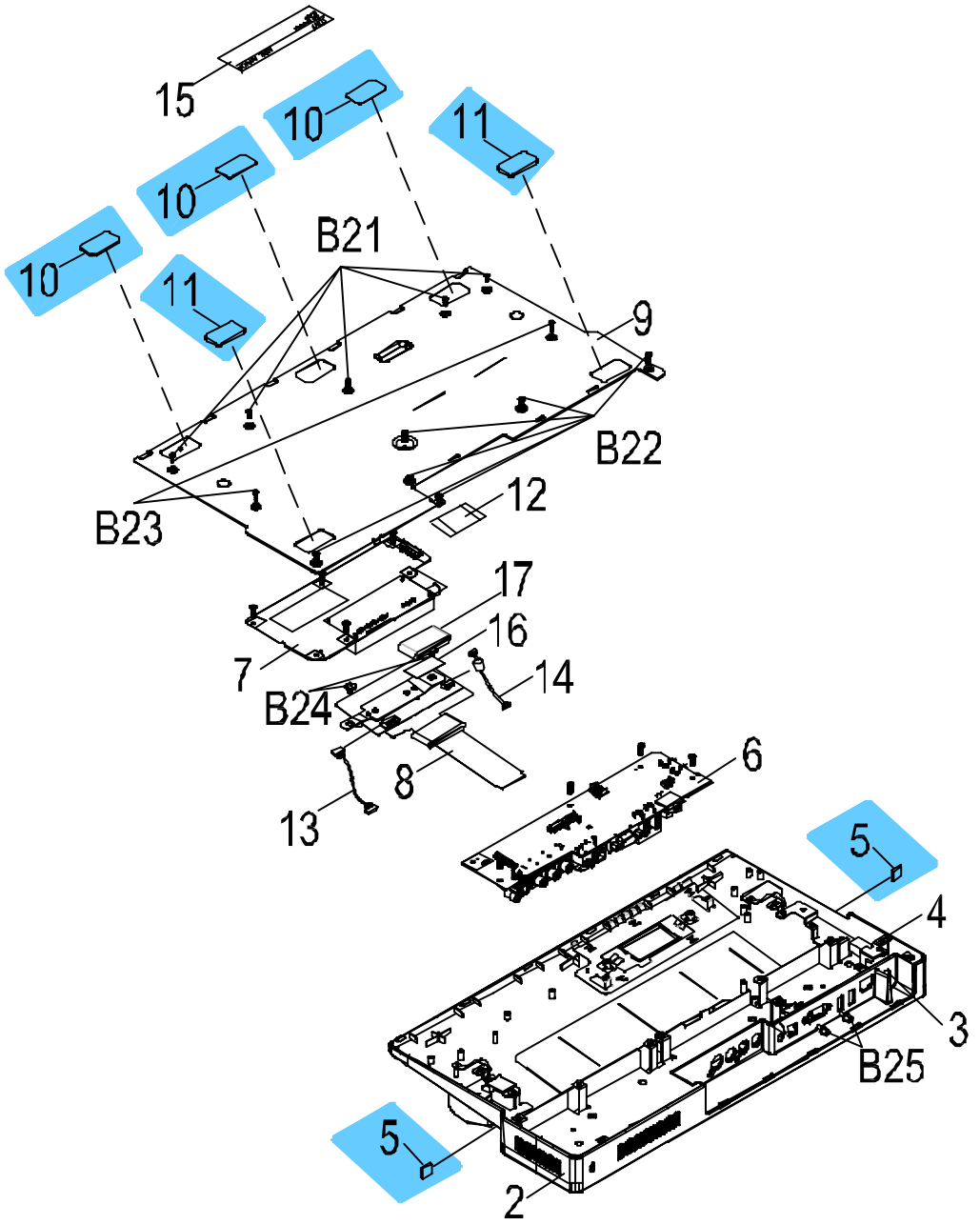

Sony Confidential

A-2. ACCESSORIES (Port Replicator)

* : CTO Model

	Ref.No.	Part No.		Description	J								AM																								EU																				AO										
					FS71B	FS51B	FS31B	FS21B	FS21	FS91PS*	FS91PSY*	FS91S*	FS680	FS660P	FS660	FS640	FS675P	FS635B	FS625B	FS645P	FS670FG	FS650F	FS630F	FS615F	FS640Q	FS655FP	FS640FP	FS610FP	FS620P	FS620	FS630	FS690P*	FS690B*	FS690*	FS690BH*	FS295XP	FS215Z	FS215M	FS295VP	FS215B	FS215E	FS215SR	FS215MR	FS285M	FS285B	FS285E	FS215S	FS285H	FS28C	FS25C	FS28GP	FS28SP	FS28LP	FS28TP	FS25GP	FS25SP	FS25LP	FS25TP
	2	A-1127-780-A		RS01-TOP-ASM									•								•											•	•	•	•																											
		A-1128-702-A		RS01-TOP-ASM																																	•																									
	3	A-1122-559-A		RS01-CABLE-DC-IN									•								•											•	•	•	•		•																									
	4	2-599-525-01		RS01-HOLDER-DCJACK									•								•											•	•	•	•		•																									
	5	2-637-689-01	&	RUBBER 95*95*13									•								•											•	•	•	•		•																									
	6	A-1122-558-A		RS01-PCB-MAIN(Sub-Assy)									•								•											•	•	•	•		•																									
	7	A-1122-564-A		3062_BOARD_TV-TUNER_REF (U)									•								•											•	•	•	•																									
		A-1122-565-A		3062_BOARD_TV-TUNER_REF (E)																																	•																									
	8	A-1122-562-A		RS01-PCB-DOCKING-CONN(Sub-Assy)									•								•											•	•	•	•		•																									
	9	A-1127-781-A		RS01-BTM-ASM(Sub-Assy)									•								•											•	•	•	•		•																									
	10	2-546-323-01	&	RS01-RUBBER-FOOT-FRONT									•								•											•	•	•	•		•																									
	11	2-637-688-01	&	RS01 RUBBER 40T (FOOT BACK)									•								•											•	•	•	•		•																									
	12	1-963-853-11		RS01-FPC-MB-TV									•								•											•	•	•	•		•																									
	13	A-1122-560-A		RS01-CABLE-POWER-4P									•								•											•	•	•	•		•																									
	14	A-1122-561-A		RS01-CABLE-RJ45									•								•											•	•	•	•		•																									
⚠1 [COR]	15	2-630-626-01		LABEL, MODEL NUMBER (for US)									•								⬅											•	•	•	•																									
⚠1 [ADD]		2-630-626-11		LABEL, MODEL NUMBER (for US and LATIN)									•								•											•	•	•	•																									
		2-634-191-01		LABEL, MODEL NUMBER (E)																																	•																									
		2-634-191-11		LABEL, MODEL NUMBER (E-IT)																																	•																									
	16	2-637-685-01		DOUBLE ADHESIVE 30*15*0.12									•								•											•	•	•	•		•																									
	17	2-637-686-01		EMI CORE 400*180*65									•								•											•	•	•	•		•																									
	B20	A-1127-782-A		RS01 SCREW ASSY (S)									•								•											•	•	•	•		•																									

⚠2 [MA] ⚠2 [MA]

Sony Confidential

T-1. SUBSTITUTION PARTS LIST

NOTE:

Please order below substitution parts if the parts with the same Ref. No. in page 4-2 to 4-17 are not available.

* : CTO Model

	Ref.No.	Part No.	Description	J								AM																														EU																		AO									
				FS71B	FS51B	FS31B	FS21B	FS21	FS91PS*	FS91PSY*	FS91S*	FS680	FS660P	FS660	FS640	FS675P	FS635B	FS625B	FS645P	FS670FG	FS650F	FS630F	FS615F	FS640Q	FS655FP	FS640FP	FS610FP	FS620P	FS620	FS630	FS690P*	FS690B*	FS690*	FS690BH*	FS295XP	FS215Z	FS215M	FS295VP	FS215B	FS215E	FS215SR	FS215MR	FS285M	FS285B	FS285E	FS215S	FS285H	FS28C	FS25C	FS28GP	FS28SP	FS28LP	FS28TP	FS25GP	FS25SP	FS25LP	FS25TP
3 [ADD]	5	1-797-464-21	TOUCHPAD	•	•	•	•	•	•		•	•	•	•	•		•	•		•	•	•	•	•				•	•	•	•	•		•	•		•	•	•	•	•	•	•	•	•	•	•	•	•	•	•	•	•	•	•	•	•	•	•	•	•	•	•	•	•	•
3 [ADD]		1-797-464-11	TOUCHPAD (GRAY)						•	•	•					•			•						•	•	•								•			•																														
	25	6-705-096-01	RAM Infineon 512 MB													•																			•			•					•																								
		6-707-648-01	RAM Hynix 512 MB						•	•	•	•	•	•		•	•								•						•	•	•	•																		•	•			•	•												
		6-707-611-01	RAM Hynix 256 MB	•	•	•	•	•	•	•	•				•			•	•	•	•	•	•	•		•	•	•	•	•	•	•	•		•	•		•	•	•	•		•	•	•	•																		
		6-707-657-01	RAM Sumsung 256 MB						•	•	•					•			•	•	•	•	•	•	•		•	•	•	•	•	•	•	•		•	•		•	•	•	•		•	•	•	•																		
		6-707-029-01	RAM Infineon 256 MB	•	•	•	•	•								•			•	•	•	•	•	•	•		•	•	•	•	•	•	•	•		•	•		•	•	•	•		•	•	•	•																		
	66	1-478-976-11	MURATA MPV4K004 (single)				•	•								•		•	•			•	•	•	•	•	•	•	•	•					•			•		•				•	•																		•	•		
1 [ADD]		1-479-136-11	MURATA MPV5K002 (dual)		•	•						•				•			•	•																•	•		•		•	•	•			•	•														•	•		
		1-479-137-13	NEC-TOKIN LCD INVERTER (dual)										•	•																																																			
	81	A-1127-944-A	MS01 ASSY ODD HITACHI DW (W)	•	•	•		•																																																								
		A-1127-946-A	MS01 ASSY ODD PANA (W-SM+DL)(W)				•																																																									
		A-1127-948-A	MS01 ASSY ODD PANA (DVD+DL)(W)									•							•	•	•															•	•		•	•	•	•	•	•	•	•	•														•	•		
		A-1127-949-A	MS01 ASSY ODD PANA (DVD+DL)(B)																						•											•			•																											
1 [ADD]		A-1127-951-A	MS01 ASSY ODD SONY (DVD+DL)(W)										•	•	•									•																•	•																								
		A-1127-952-A	MS01 ASSY ODD SONY (DVD+DL)(B)													•			•																																														
		A-1127-953-A	MS01 ASSY ODD Pioneer (DVD+DL)(W)									•	•	•	•					•	•	•		•																																										
		A-1127-954-A	MS01 ASSY ODD Pioneer (DVD+DL)(B)													•			•						•																																									
	91	A-1127-960-A	MS02 ASSY HDD 100GB (FJ)		•				•	•	•					•															•	•	•	•	•	•				•					•																		
		A-1127-961-A	MS02 ASSY HDD 100GB (TO)	•								•																																																					
		A-1108-903-A	MS01 ASSY HDD 80GB (HI)			•			•	•	•		•	•																	•	•	•	•				•					•	•	•		•																		
		A-1127-962-A	MS02 ASSY HDD 80G (FJ)			•			•	•	•		•	•	•					•	•				•	•		•	•	•	•	•	•	•			•					•																					
		A-1108-905-A	MS01 ASSY HDD 80G (TO)												•					•	•				•	•		•	•	•							•					•	•	•	•		•																		
		A-1108-906-A	MS01 ASSY HDD 60GB (HI)				•	•	•	•	•						•				•										•	•	•	•																												•	•		
		A-1127-963-A	MS02 ASSY HDD 60G (FJ)					•	•	•	•																					•	•	•	•						•	•																								
		A-1108-908-A	MS01 ASSY HDD 60G (TO)				•										•				•																					•	•																								
		A-1108-909-A	MS01 ASSY HDD 40G (TO)						•	•	•						•		•	•			•	•			•				•	•	•	•																												•	•		
		A-1127-964-A	MS02 ASSY HDD 40GB (FJ)						•	•	•						•		•	•			•				•				•	•	•	•																														
1 [CHG]		1-479-116-12	ADAPTER AC19V11																													•	•	•	•																														
1 [CHG]		1-479-116-31	ADAPTER AC19V11																													•	•	•	•																														
1 [CHG]	1 2006	1-479-114-23	ADAPTER AC19V10	•	•	•	•	•					•	•	•	•	•	•	•					•				•	•	•					•		•	•	•	•			•	•	•	•	•																		
1 [CHG]		1-479-114-31	ADAPTER AC19V10	•	•	•	•	•					•	•	•	•	•	•	•					•				•	•	•					•		•	•	•	•			•	•	•	•	•																		
1 [ADD]		1-479-114-41	ADAPTER AC19V10	•	•	•	•	•					•	•	•	•	•	•	•					•				•	•	•					•		•	•	•	•			•	•	•	•	•																		

2 [MA] 2 [MA]

Sony Confidential

DIP Switch

The DIP switch setting is following table.

J

VGN-FS71B VGN-FS51B VGN-FS31B VGN-FS21B VGN-FS21 VGN-FS91PS*/FS91PSY*/FS91S*

15.4inch WXGA(BR)

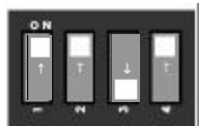

AM

VGN-FS680 VGN-FS660P VGN-FS660 VGN-FS640 VGN-FS675P VGN-FS635B VGN-FS625B VGN-FS645P VGN-FS670FG VGN-FS650F

2 [MA]

2 [MA]

VGN-FS630F VGN-FS615F VGN-FS640Q VGN-FS655FP VGN-FS640FP VGN-FS610FP VGN-FS620P VGN-FS620 VGN-FS630 VGN-FS690P*/FS690B*/FS690*/FS690BH*

15.4inch WXGA(HC)

EU

VGN-FS295XP VGN-FS215Z VGN-FS215M VGN-FS295VP VGN-FS215B VGN-FS215E VGN-FS215SR

15.4inch WSXGA+(HC)

VGN-FS215MR VGN-FS285M VGN-FS285B VGN-FS285E VGN-FS215S VGN-FS285H

1 [ADD]

AO

VGN-FS28C VGN-FS25C VGN-FS28GP VGN-FS28SP VGN-FS28LP

15.4inch WXGA(BR)

A-1108-878-A
ASSY LCD for
VGN-FS25GP

1 [ADD]

VGN-FS28TP VGN-FS25GP VGN-FS25SP VGN-FS25LP VGN-FS25TP

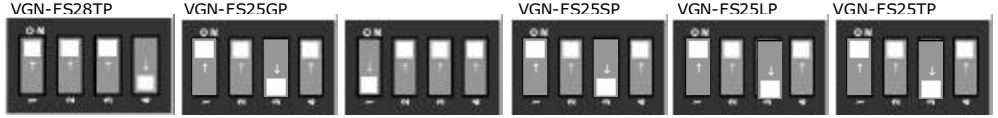

(A-1133-649-A) (A-1108-878-A)

The DIP switch setting is different depending the types of LCD.
Set the DIP switch of CTO model in accordance with the [FOR CTO MODEL].

Sony Confidential

CHAPTER 5.
OTHERS

5-1.Replacing the CPU

1. Removing the CPU

1. Insert a flat-blade screwdriver into the notch as shown illustration and rotate it so that the protrusion comes to the lock release position.
2. Pull the CPU gently upward to lift it out of the CPU socket

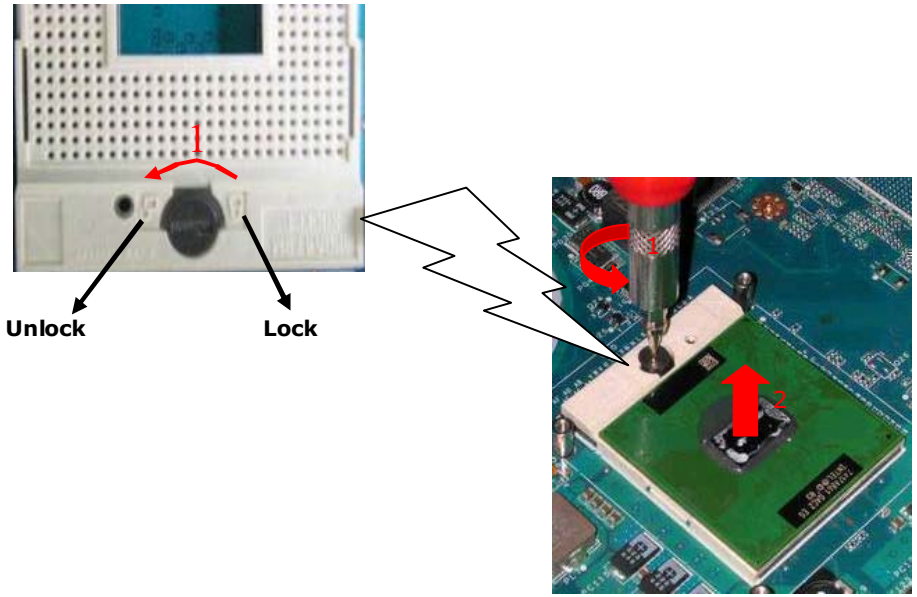

2. Installing the CPU

1. Align the triangle reference mark of the mark the CPU with that of the CPU socket and insert all the pins of the CPU to the corresponding holes of the CPU socket.
2. Insert the flat head (-) screwdriver into the specified position and rotate th screwdriver to the LOCK position.

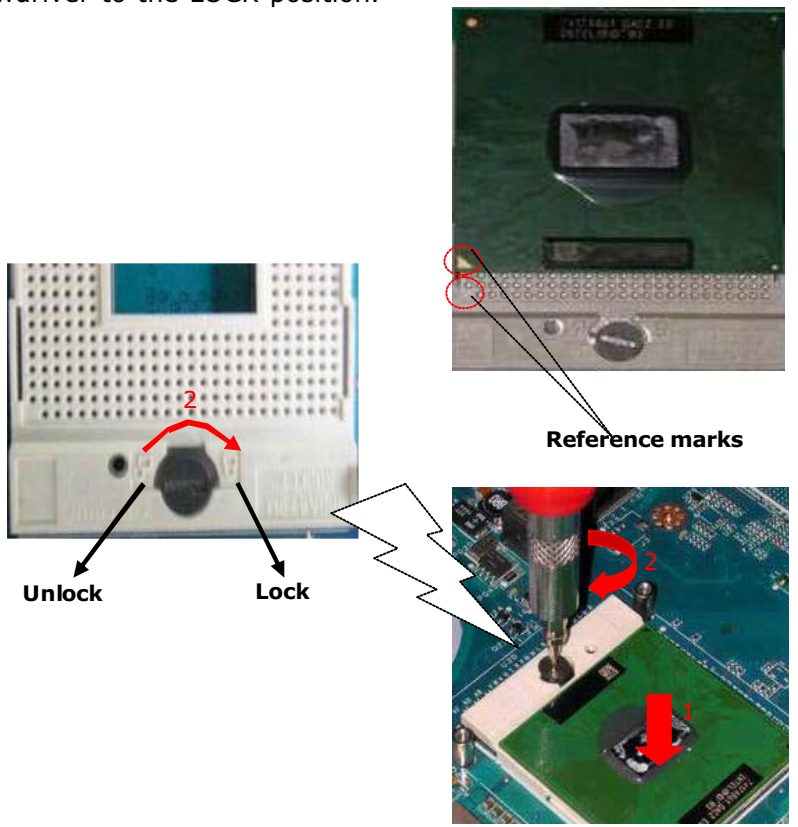

Sony Confidential

5-2. Wiring the W-LAN Cable

* The MS02 PWA ANTENNA is installed also in the models without Wireless LAN.
  Refer to the instruction below to see how to wire the CABLE.

Using KAPTION TAPE to secure the Cable.

Sony Confidential

VGN-FS71B/FS51B/FS31B/FS21B/FS21/FS91PS/FS91PSY/FS91S (J)
VGN-FS680/FS660P/FS660/FS640/FS675P/FS635B/FS625B/FS645P/FS670FG/FS650F/FS630F/FS615F/FS640Q/FS655FP/FS640FP/FS610FP/FS620P/FS620/FS630/FS690P/FS690B/FS690/FS690BH (AM)
VGN-FS295XP/FS215Z/FS215M/FS295VP/FS215B/FS215E/FS215SR/FS215MR/FS285M/FS285B/FS285E/FS215S/FS285H (EU)
VGN-FS28C/FS25C/FS28GP/FS28SP/FS28LP/FS28TP/FS25GP/FS25SP/FS25LP/FS25TP (AO)

List of VGN-F Series (As of Nov, 2005)

Service Manual Part No.	Model Name			
	J	AM	EU	AO
9-876-414-XX	VGN-FS70B VGN-FS20 VGN-FS50B VGN-FS90PS * VGN-FS30B VGN-FS90S *	VGN-FS570 VGN-FS520B VGN-FS550 VGN-FS500 * VGN-FS550P VGN-FS500P * VGN-FS540P VGN-FS500B * VGN-FS530B VGN-FS550F	VGN-FS195XP VGN-FS195VP VGN-FS115Z VGN-FS115B VGN-FS115S VGN-FS115ZR VGN-FS115M VGN-FS115MR VGN-FS115E	VGN-FS18CP VGN-FS18TP VGN-FS15C VGN-FS15GP VGN-FS18GP VGN-FS15SP VGN-FS18SP VGN-FS15LP VGN-FS18LP VGN-FS15TP
9-876-425-XX	VGN-FS71B VGN-FS21 VGN-FS51B VGN-FS91PS * VGN-FS31B VGN-FS91PSY * VGN-FS21B VGN-FS91S *	VGN-FS680 VGN-FS670FG VGN-FS620P VGN-FS660P VGN-FS650F VGN-FS620 VGN-FS660 VGN-FS630F VGN-FS630 ☜ VGN-FS640 VGN-FS615F VGN-FS690P * VGN-FS675P VGN-FS640Q VGN-FS690B * VGN-FS635B VGN-FS655FP VGN-FS690 * VGN-FS625B VGN-FS640FP VGN-FS690BH * ☜ VGN-FS645P VGN-FS610FP	VGN-FS295XP VGN-FS215MR VGN-FS215Z VGN-FS285M VGN-FS215M VGN-FS285B VGN-FS295VP VGN-FS285E VGN-FS215B VGN-FS215S VGN-FS215E VGN-FS285H VGN-FS215SR	VGN-FS28C VGN-FS28TP VGN-FS25C VGN-FS25GP VGN-FS28GP VGN-FS25SP VGN-FS28SP VGN-FS25LP VGN-FS28LP VGN-FS25TP

***: CTO Model**

☜: Additional Model

This manual and the constituent data may not be replicated, copied nor reprinted in whole or in part without prior written authorization of Sony Corporation

2005KF00-1
© 2005 Sony Corporation
Published by Sony Corporation VBD VAIO-GS Division

Revision History

Suffix	Ver.	Date	Contents	QM No.
-01	Ver.1	2005.06.07	First Edition	
-02	Ver. 2	2005.08.24	△1 **Page4-4, Page4-5,Page4-6, Page4-8,Page4-9, Page4-10, Page4-11, Page4-12, Page4-13, Page4-14, Page4-16,Page4-19,Page4-20, Page4-21**	N2005_037CK
-03	Ver.3	2005.10.11	△2 **Front Page (Model Line Up), Page1-1, Page1-4, Page4-4, Page4-6,Page4-8,Page4-11,Page4-12,Page4-13,Page4-14, Page4-16, Page4-17,Page4-19, Page4-20, Page4-21, Back Cover**	N2005_045AK
-04	Ver.4	2005.11.01	△3 **Front Page, Page4-20**	N2005_061CK
<Remarks>				